Cognitive Radio in HF Communications: Selective Transmission and Broadband Acquisition

Ph.D. Thesis

Author: Laura Beatriz Melián Gutiérrez

Supervisors:

Dr. Iván A. Pérez Álvarez Dr. Santiago Zazo Bello

Doctorado en Cibernética y Telecomunicación

Motivation

HF band is a vital alternative to satellite links

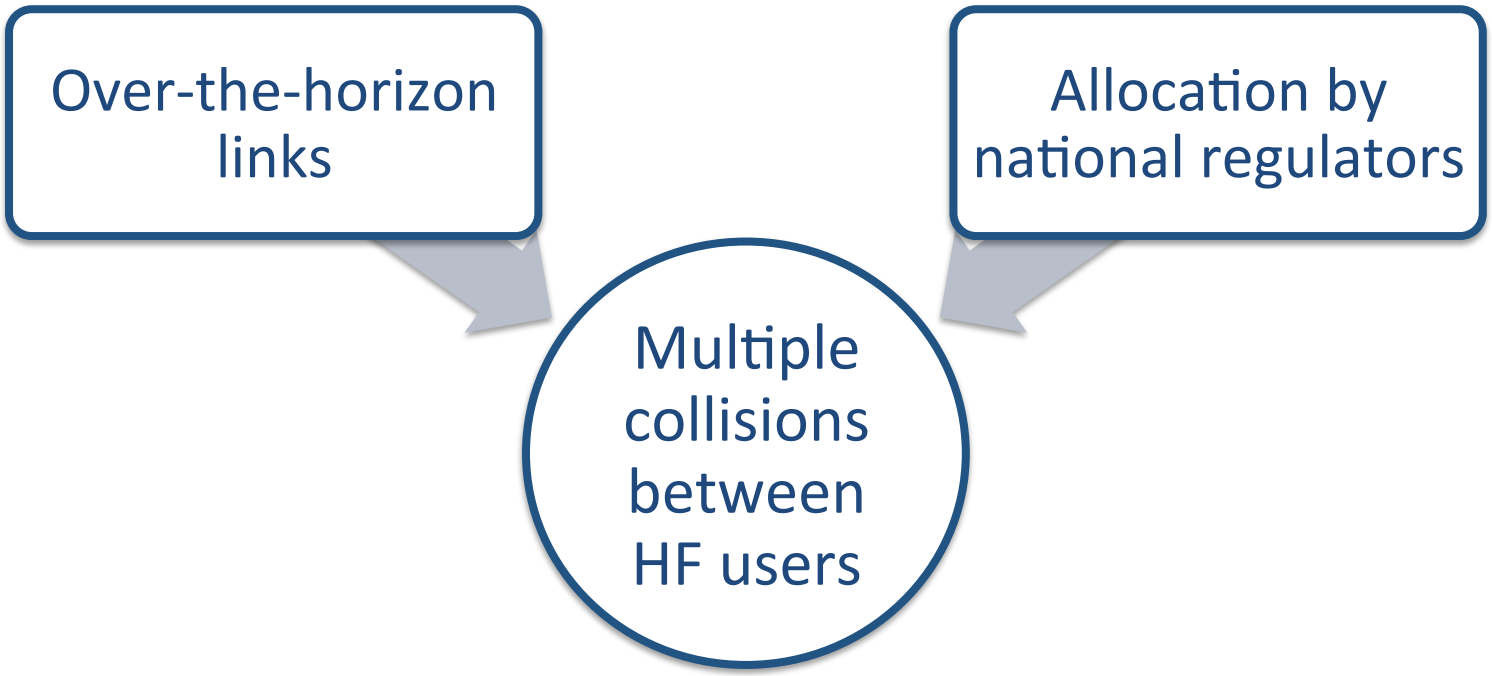

Motivation

2G and 3G ALE protocols

- Do not manage the spectrum in a wide-band sense
- Do not support real time channel evaluation
- Link establishment can last for several seconds
- Do not monitor users' activity in the recent past

Motivation

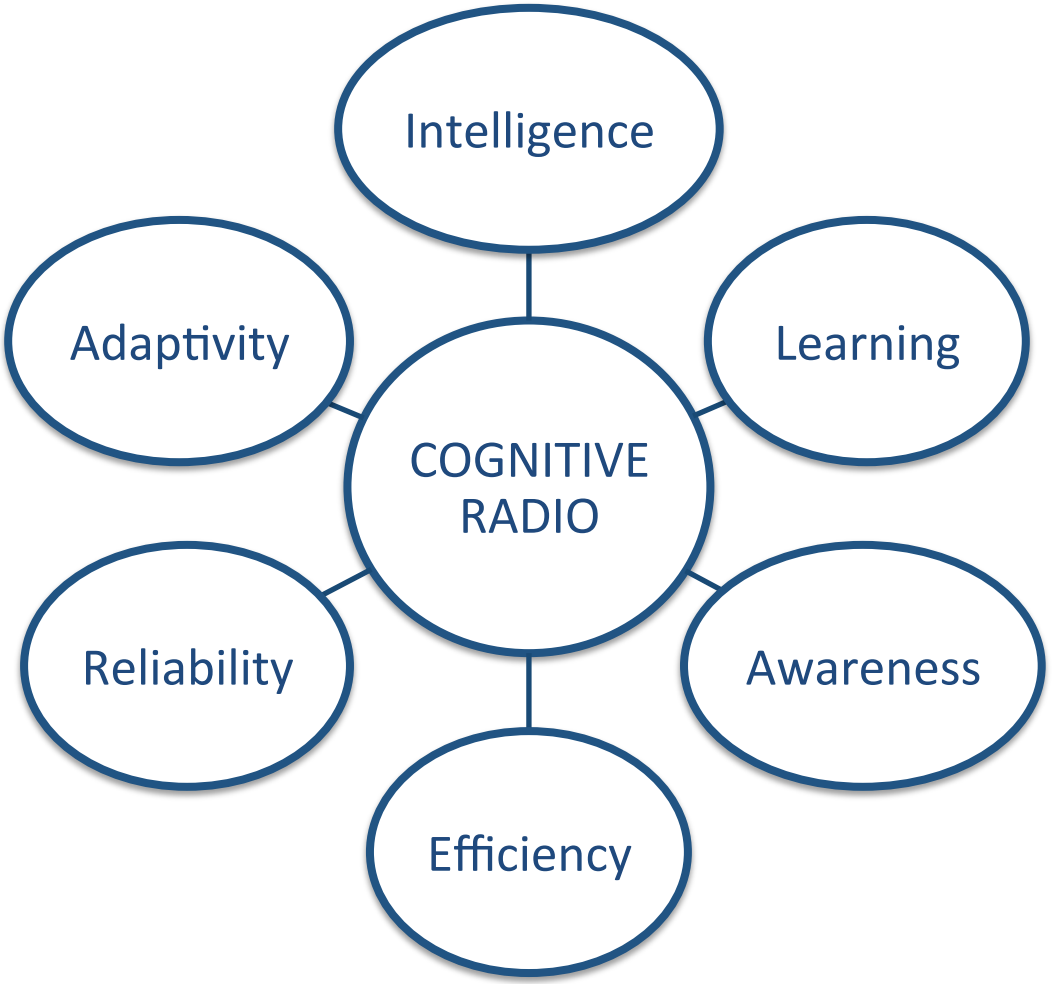
Intelligence
Adaptivity
Learning
COGNITIVE RADIO
Reliability
Awareness
Efficiency

Motivation

Cognitive cycle of tasks as defined by Mitola

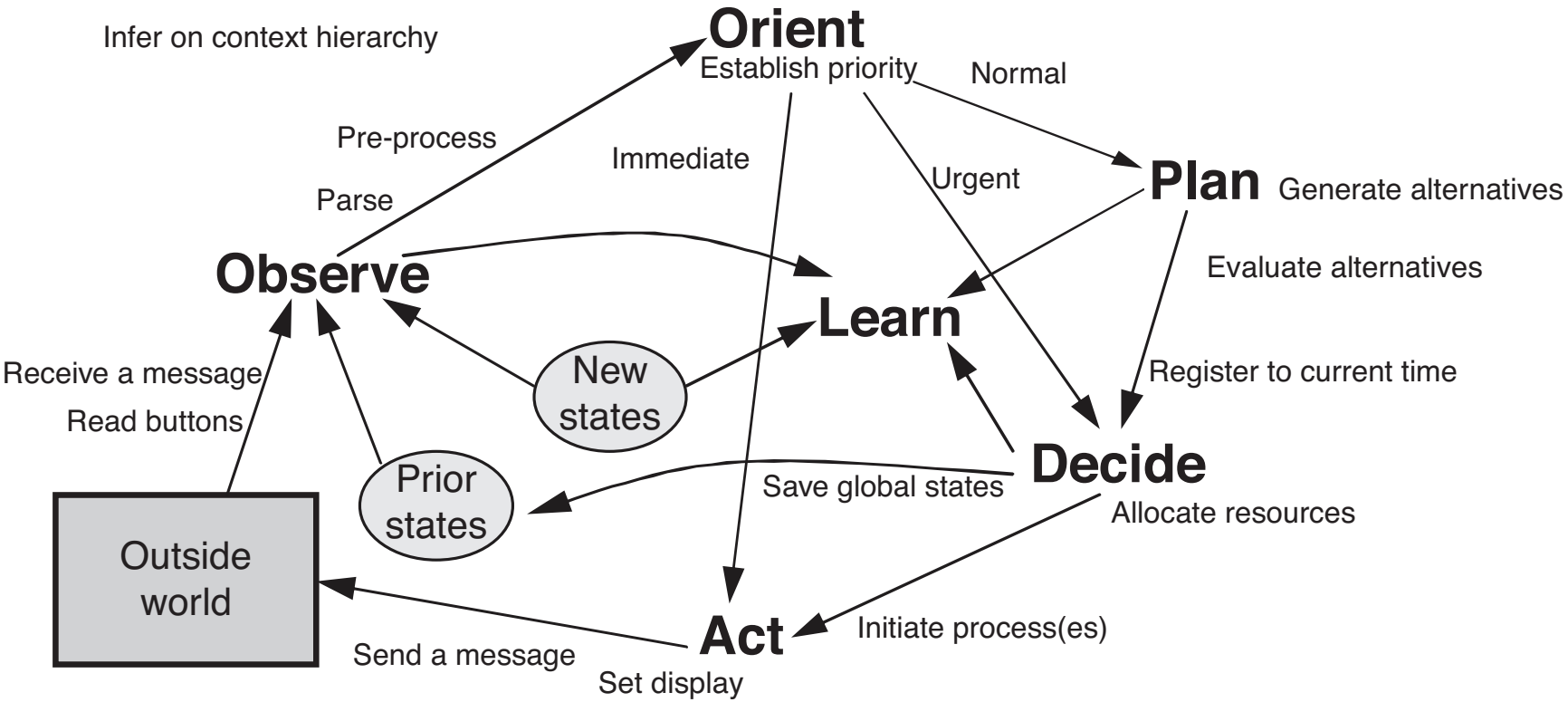

Motivation

Cognitive Radio and HF Communications

- ALE as a primitive form of Cognitive Radio
- New specifications for the ALE protocol based on Cognitive Radio

Goals of this Thesis

The primary goal of this Thesis is to evaluate and to show the feasibility of the application of cognitive radio principles to HF systems.

Goals of this Thesis

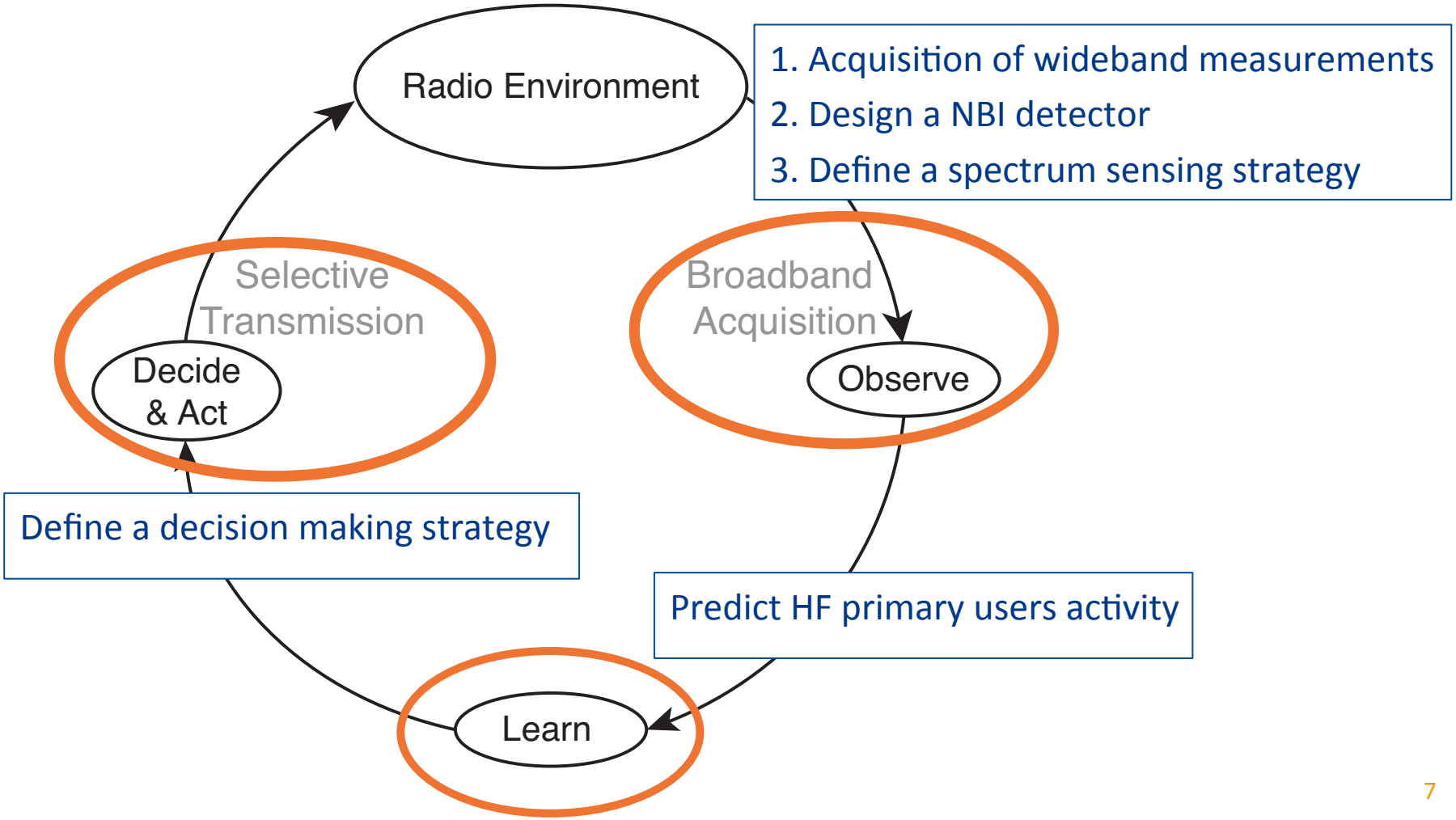

Related Publications

MELIÁN-GUTIÉRREZ, L., MODI, N., MOY, C., BADER, F., PÉREZ-ÁLVAREZ, I., & ZAZO, S. (2015, September). Hybrid UCB-HMM: A Machine Learning Strategy for Cognitive Radio in HF Band. *IEEE Transactions on Cognitive Communications and Networking*, 1, no. 3, 347-358.

MELIÁN-GUTIÉRREZ, L., GARCIA-RODRIGUEZ, A., PÉREZ-ÁLVAREZ, I., & ZAZO, S. (2015). Compressive Narrowband Interference Detection for Wideband Cognitive HF Front-Ends. *Springer Wireless Personal Communications (Submitted)*.

MELIÁN-GUTIÉRREZ, L., MODI, N., MOY, C., PÉREZ-ÁLVAREZ, I., BADER, F., & ZAZO, S. (2015, June). Upper Confidence Bound Learning Approach for Real HF Measurements. In *IEEE International Conference on Communications Workshops (ICC Workshops)* (p. 281-286). London, UK.

MELIÁN-GUTIÉRREZ, L., MODI, N., MOY, C., PÉREZ-ÁLVAREZ, I., BADER, F., & ZAZO, S. (2015, May). DSA with Reinforcement Learning in HF Band. In *1st URSI Atlantic Radio Science Conference (AT-RASC).* Gran Canaria, Spain.

MELIÁN-GUTIÉRREZ, L., ZAZO, S., BLANCO-MURILLO, J., PÉREZ-ÁLVAREZ, I., GARCÍA-RODRÍGUEZ, A., & PÉREZ-DÍAZ, B. (2013). HF spectrum activity prediction model based on HMM for cognitive radio applications. *Elsevier Physical Communication*, *9*, 199 - 211.

MELIÁN-GUTIÉRREZ, L., ZAZO, S., BLANCO-MURILLO, J., PÉREZ-ÁLVAREZ, I., GARCÍA-RODRÍGUEZ, A., & PÉREZ-DÍAZ, B. (2012, May). Efficiency improvement of HF communications using cognitive radio principles. In *12th International Conference on Ionospheric Radio Systems and Techniques (IRST12)* (p. 1-5). York, UK.

PÉREZ-DÍAZ, B., ZAZO, S., PÉREZ-ÁLVAREZ, I., LÓPEZ-PÉREZ, J., MELIÁN-GUTIÉRREZ, L., & JIMÉNEZ- YGUACEL, E. (2012, May). Theory and practice for modelling the broadband acquisition in HF transmissions. In *12th International Conference on Ionospheric Radio Systems and Techniques (IRST12).* York, UK.

Goals of this Thesis

1. Acquisition of wideband measurements

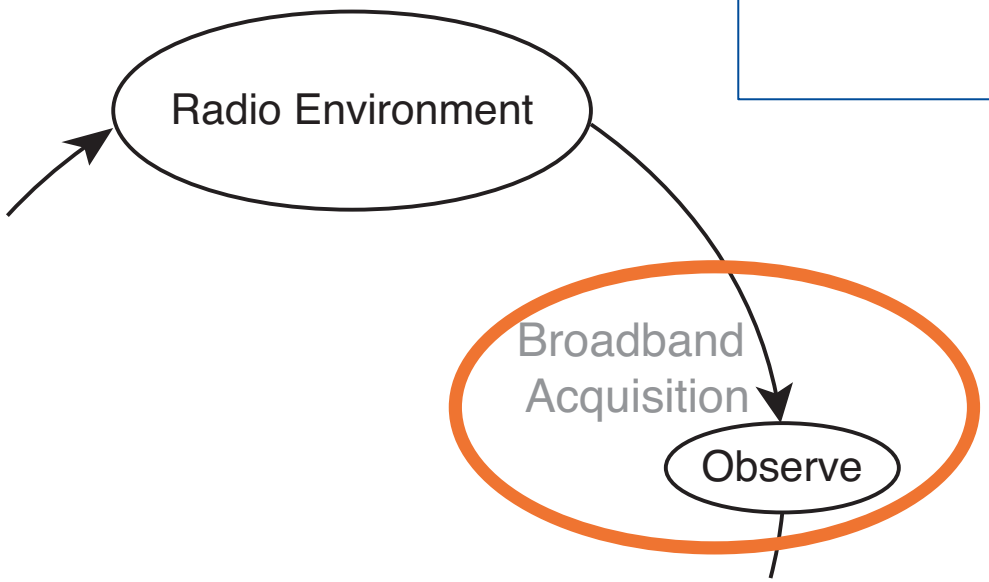

HF Measurements Database

Spectrum activity in the 14 MHz, 21 MHz and 29MHz amateur bands.

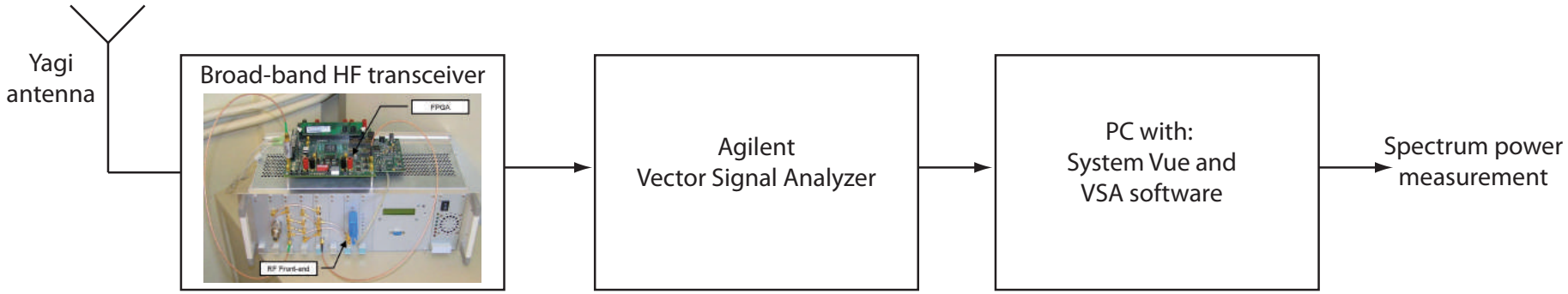

- Power measurements in the frequency domain.
- 640 kHz bandwidth (200 channels simultaneously): amateur band and other stations.
- Duration: 10 minutes.
- Weekdays & Weekends.
- Each sample represents a 3kHz channel in 2 seconds.

HF Measurements Database

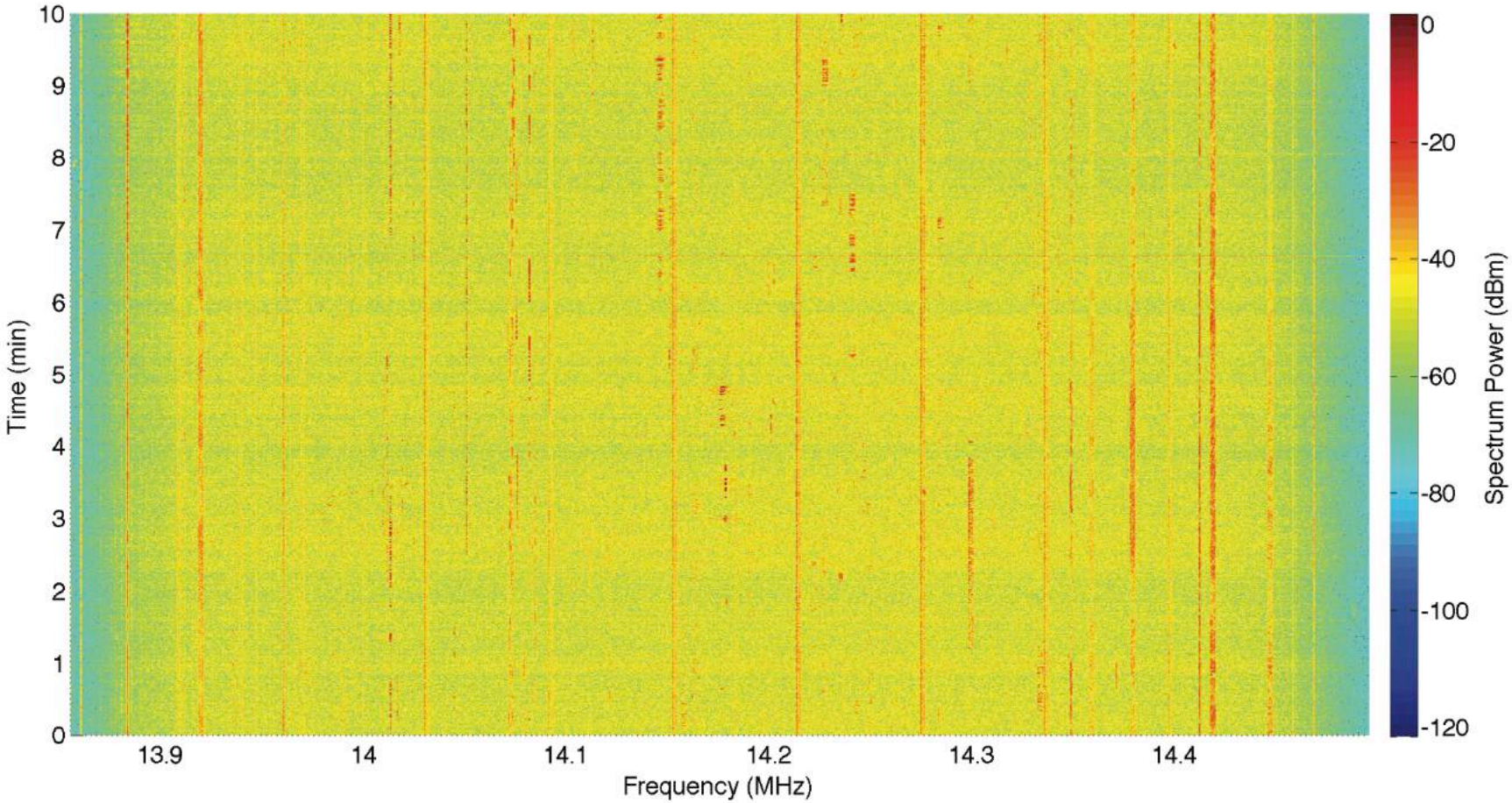

HF Measurements Database

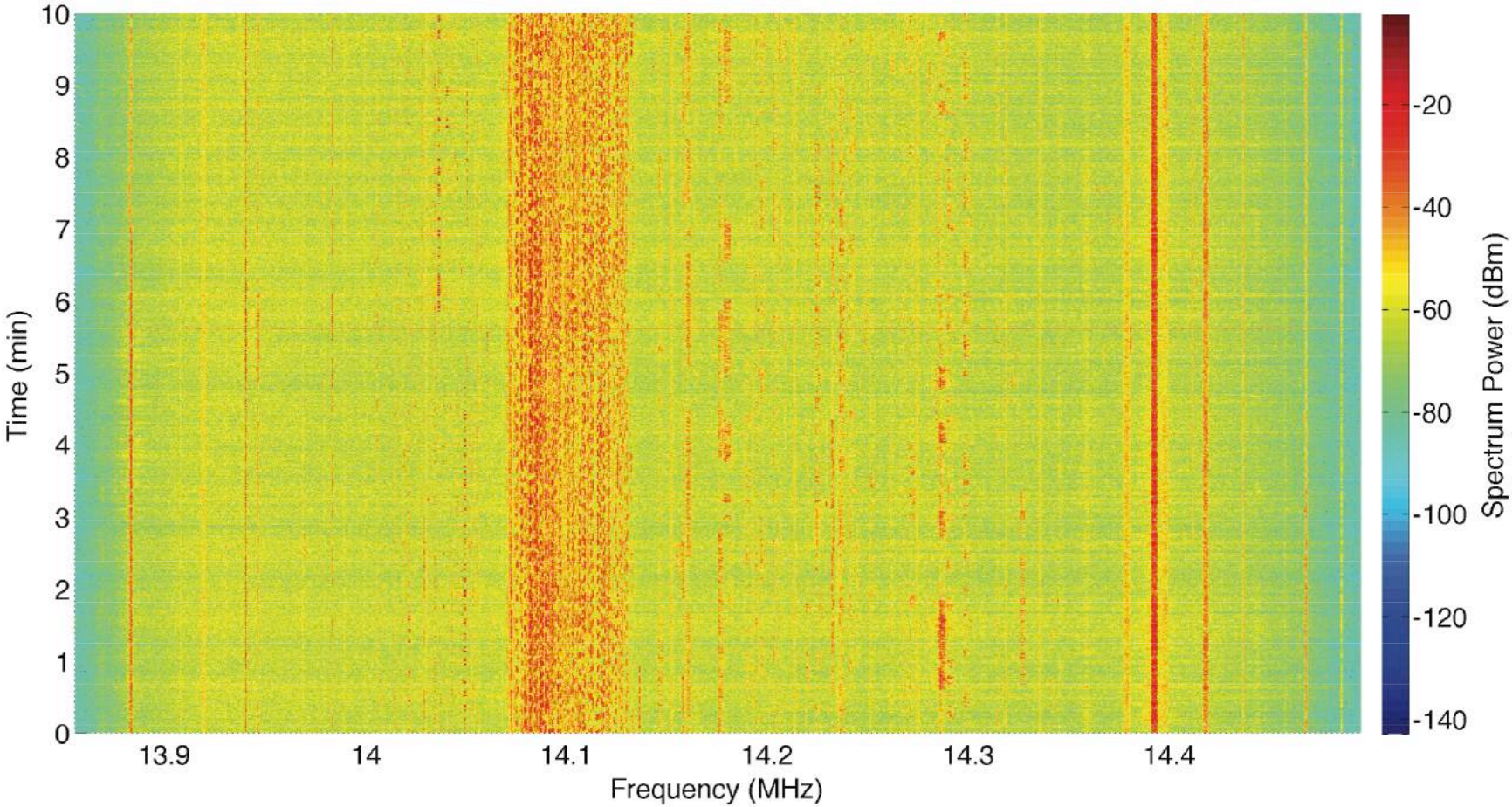

Goals of this Thesis

1. Acquisition of wideband measurements
2. Design a NBI detector

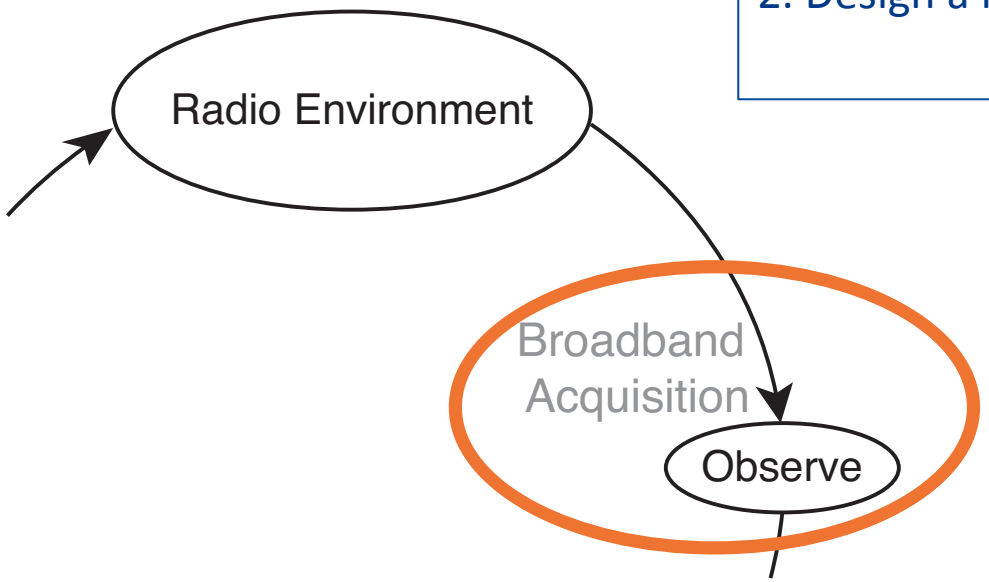

NBI in wideband HF receivers

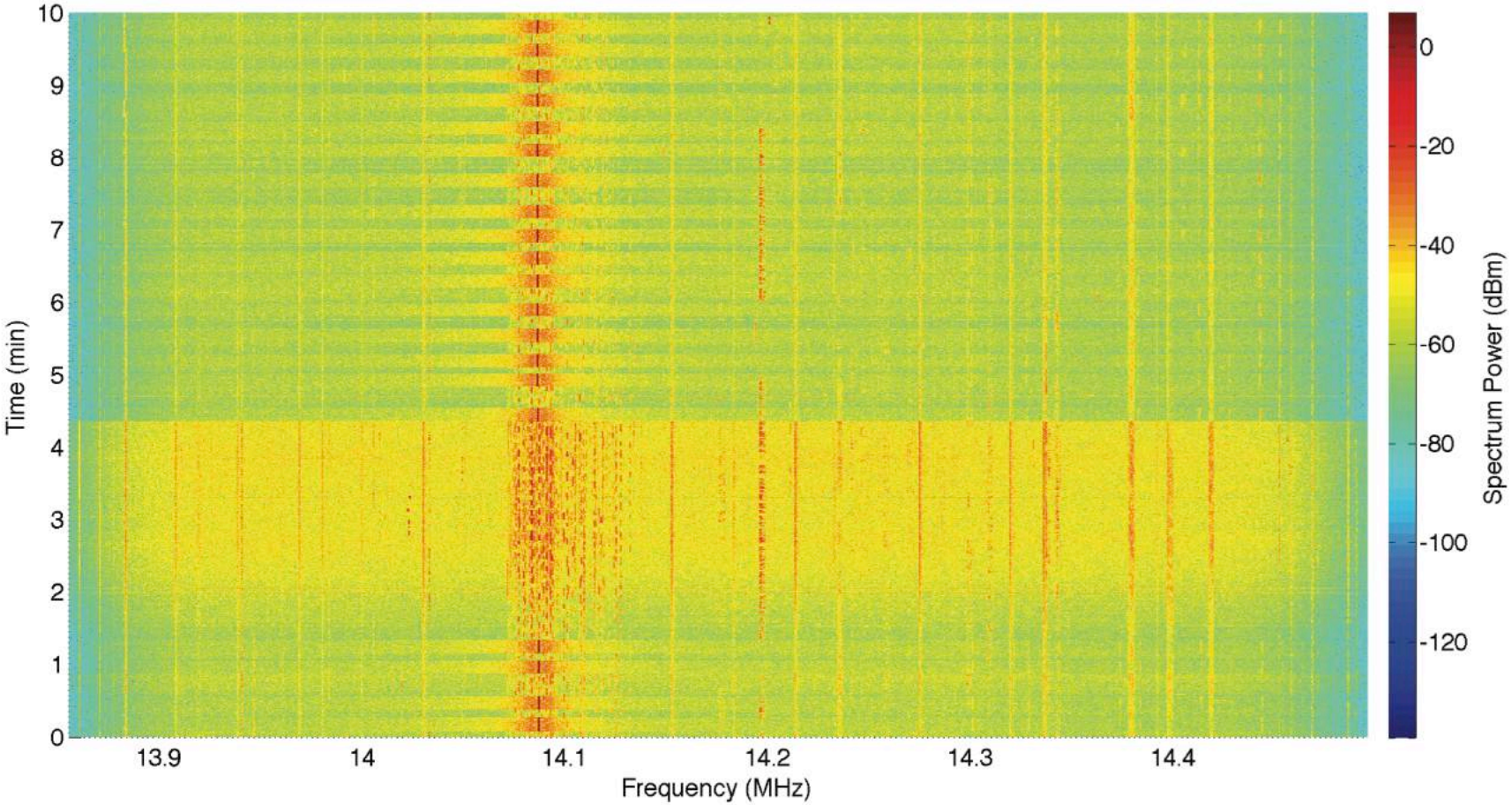

NBI in wideband HF receivers

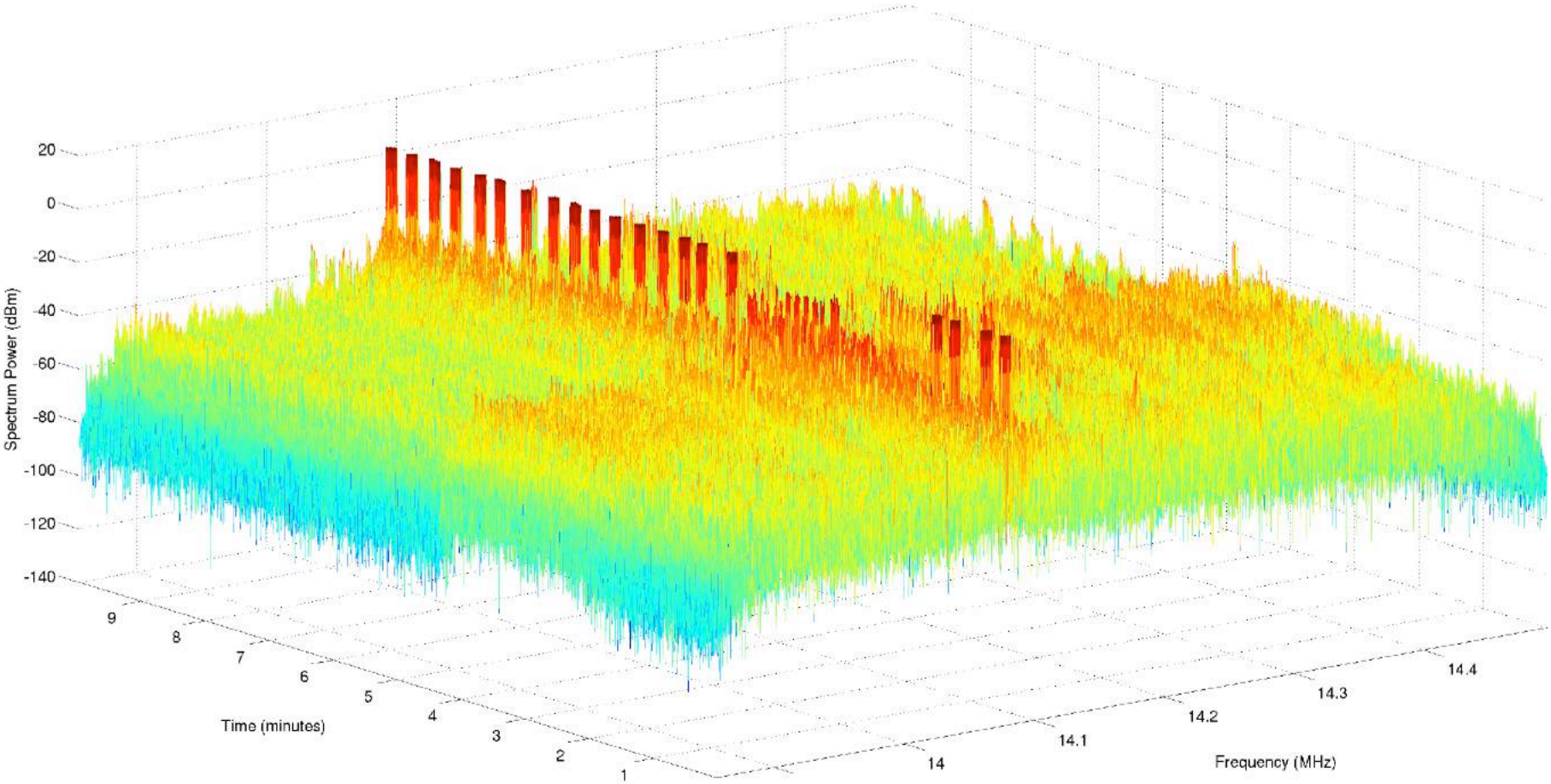

NBI in wideband HF receivers

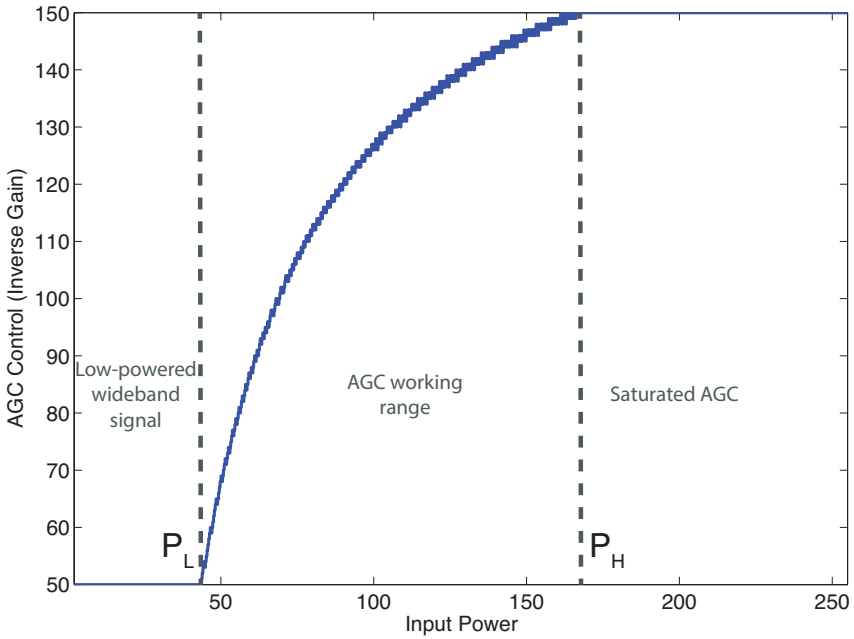

NBI in wideband HF receivers

Wideband HF transceiver – Receiver diagram block

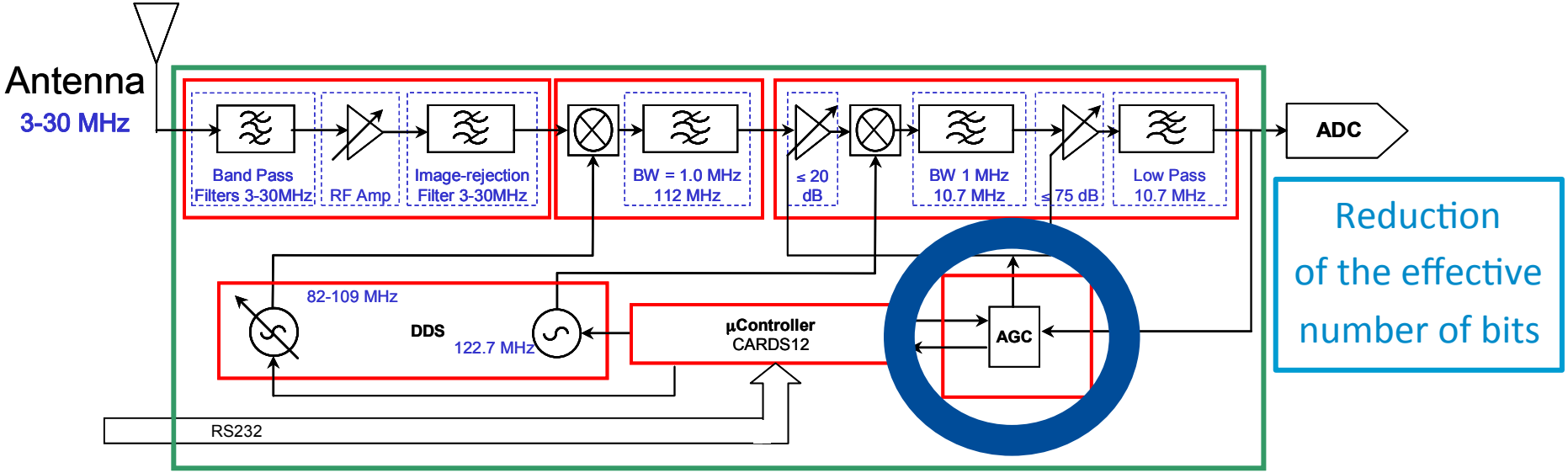

Detection and mitigation must be performed in the analog domain

NBI detection with Compressive Sensing

A proposal based on Compressive Sensing for NBI detection

ADC with $f_s << f_{Nyq}$

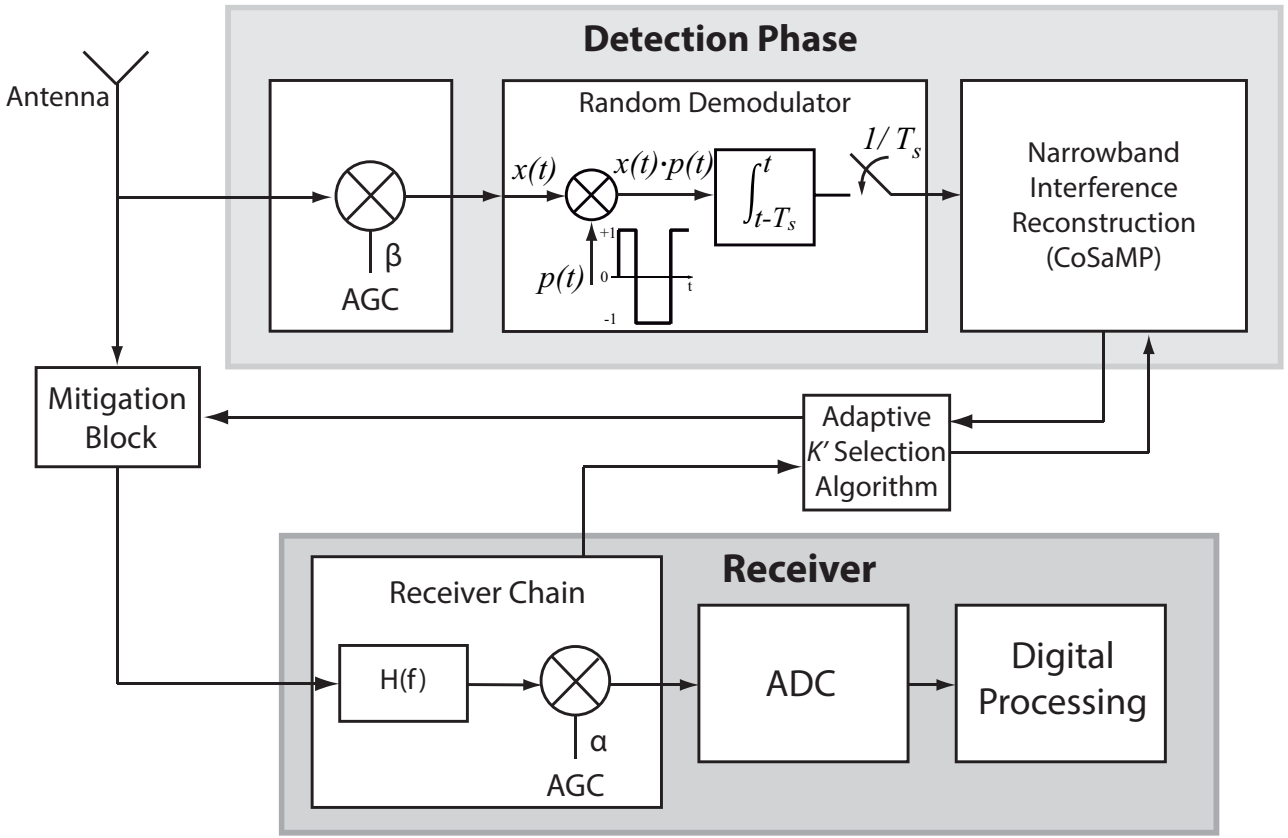

NBI detection with Compressive Sensing

Basics of Compressive Sensing:

$$y = \Phi x$$

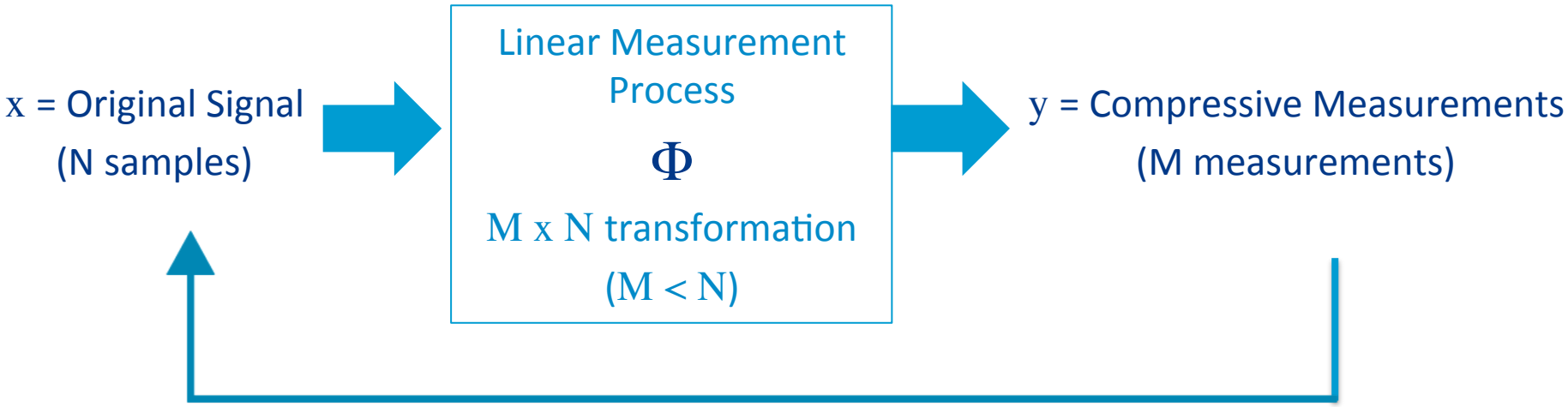

NBI detection with Compressive Sensing

Basics of Compressive Sensing:

$$y = \Phi x$$

$$x = \Psi s$$

Sparse Signal

Fourier basis

Compressible Signal

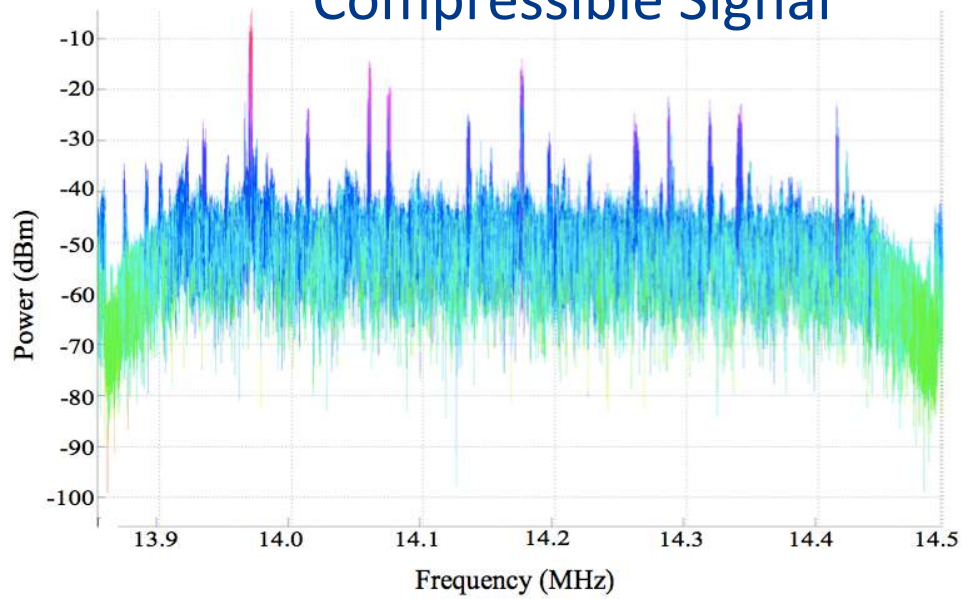

NBI detection with Compressive Sensing

A proposal based on Compressive Sensing for NBI detection

ADC with $f_s << f_{Nyq}$

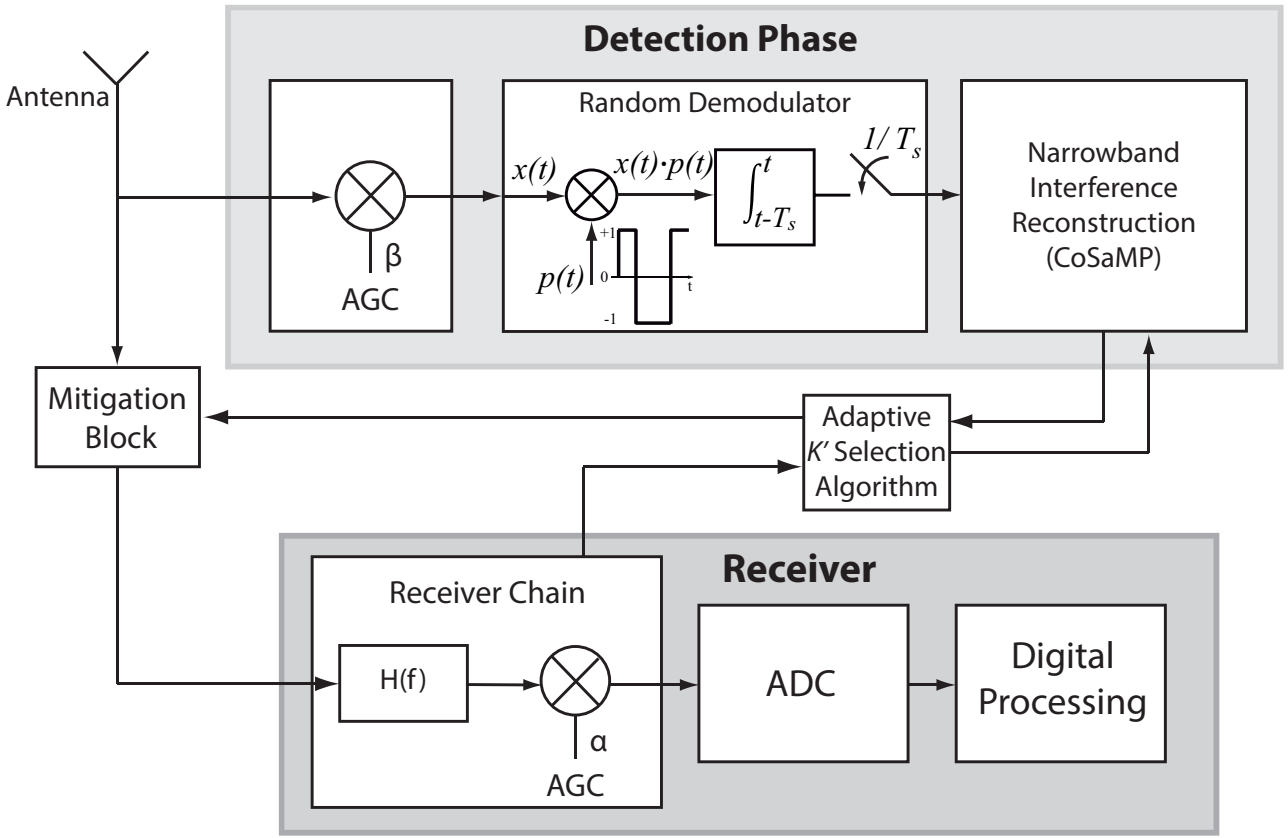

NBI detection with Compressive Sensing

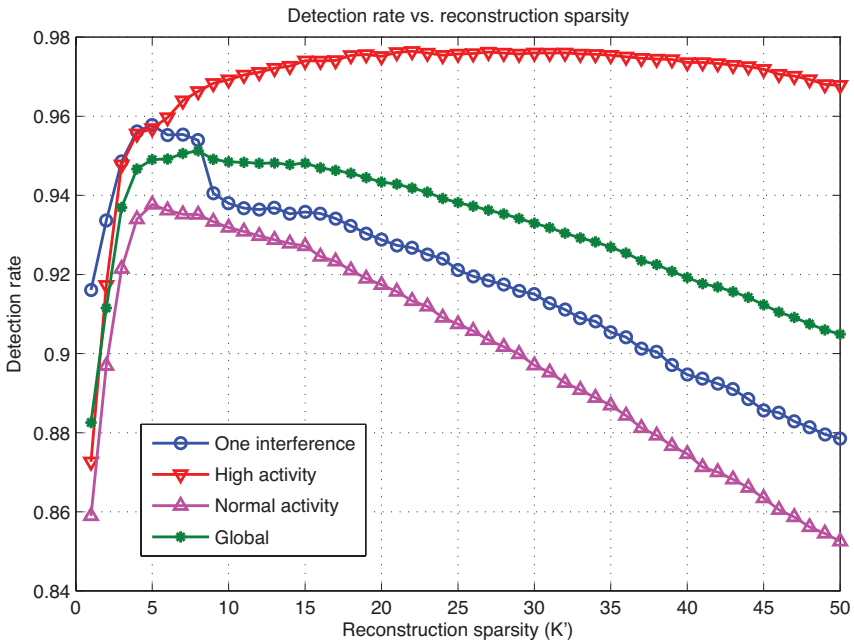

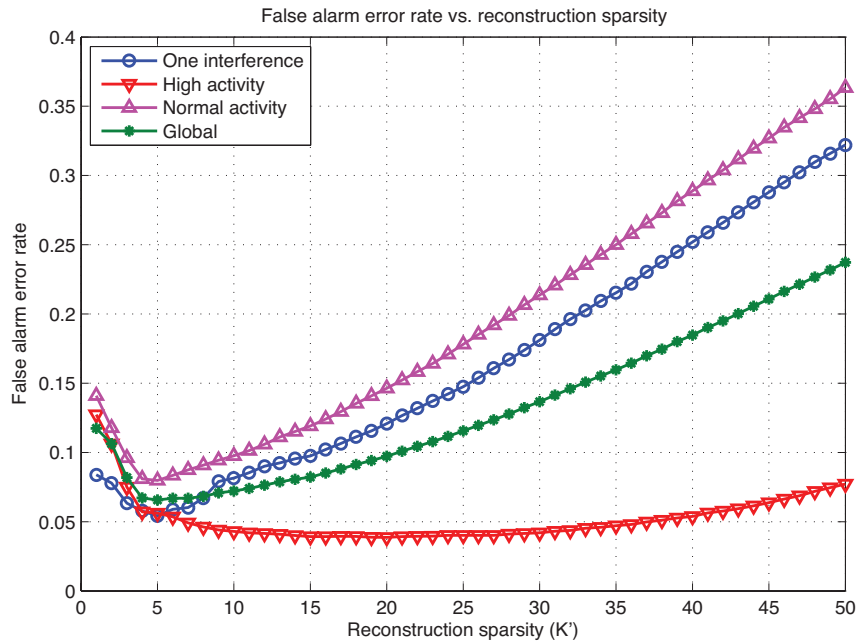

NBI detection with Compressive Sensing

Experiments Validation:

Fit of the experiments to the empirical formula of the RD

$$R \approx CK \log\left(W / K + 1\right)$$

R = Sampling Rate

K = Sparsity Level

W = Bandwidth

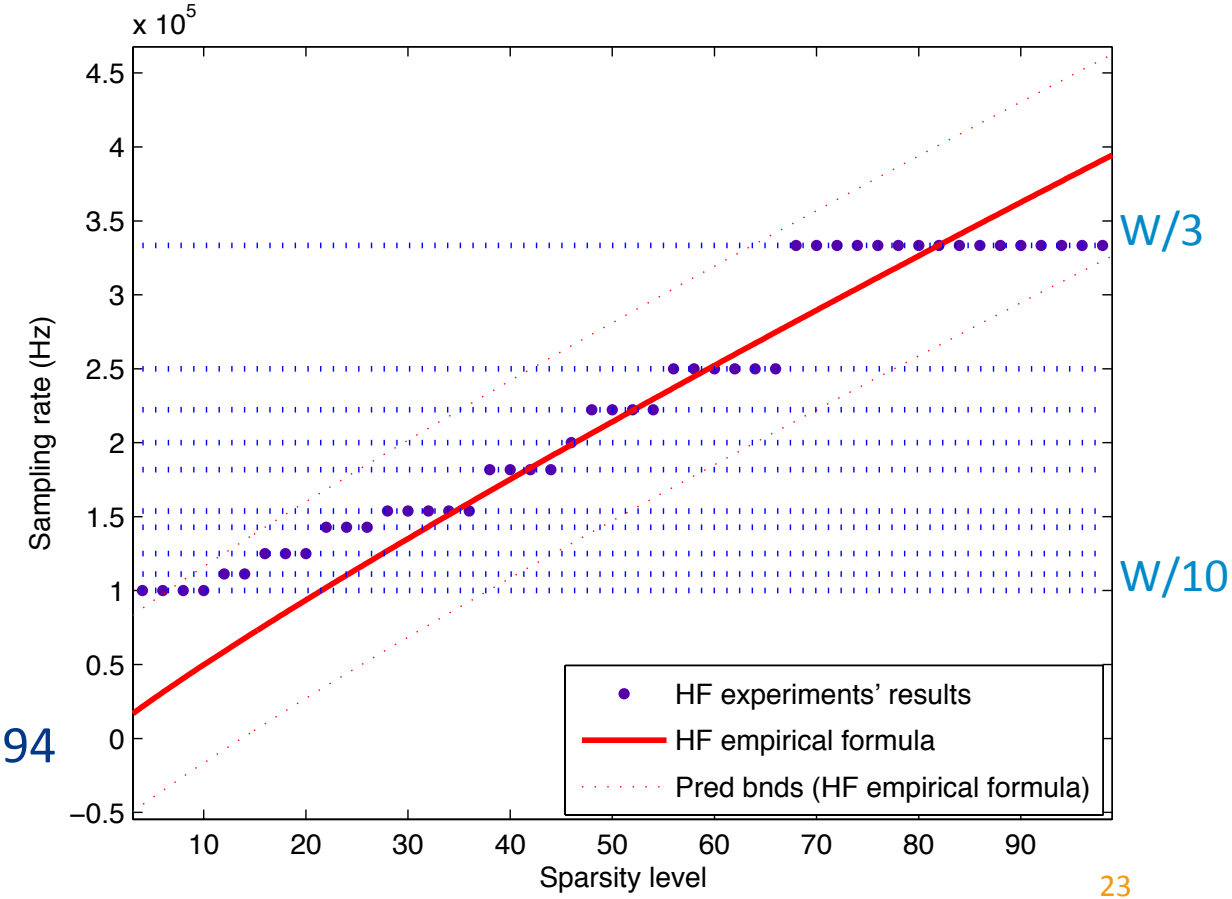

R-square fitting statistic: 0.8594

Goals of this Thesis

1. Acquisition of wideband measurements
2. Design a NBI detector
3. Define a spectrum sensing strategy

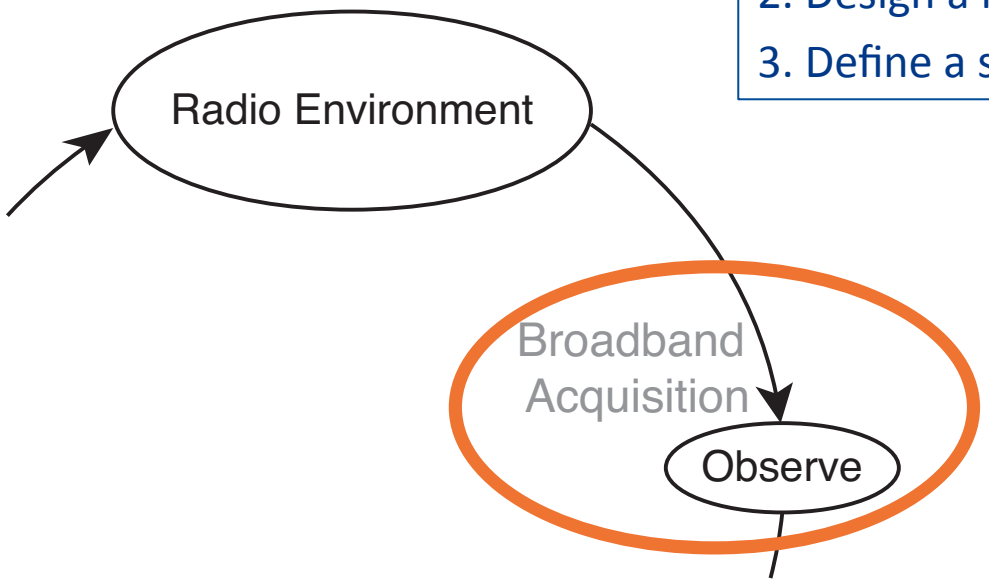

Spectrum Sensing - Energy Detection

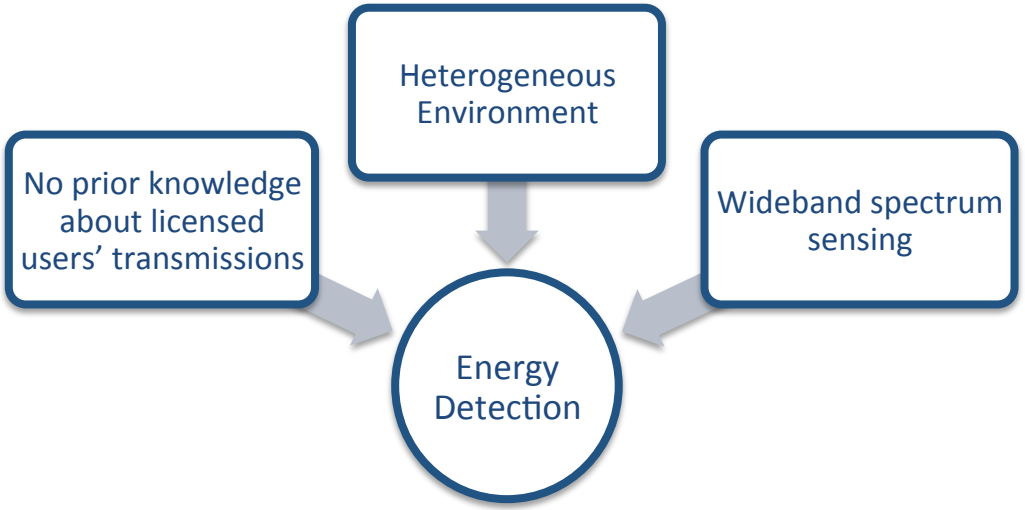

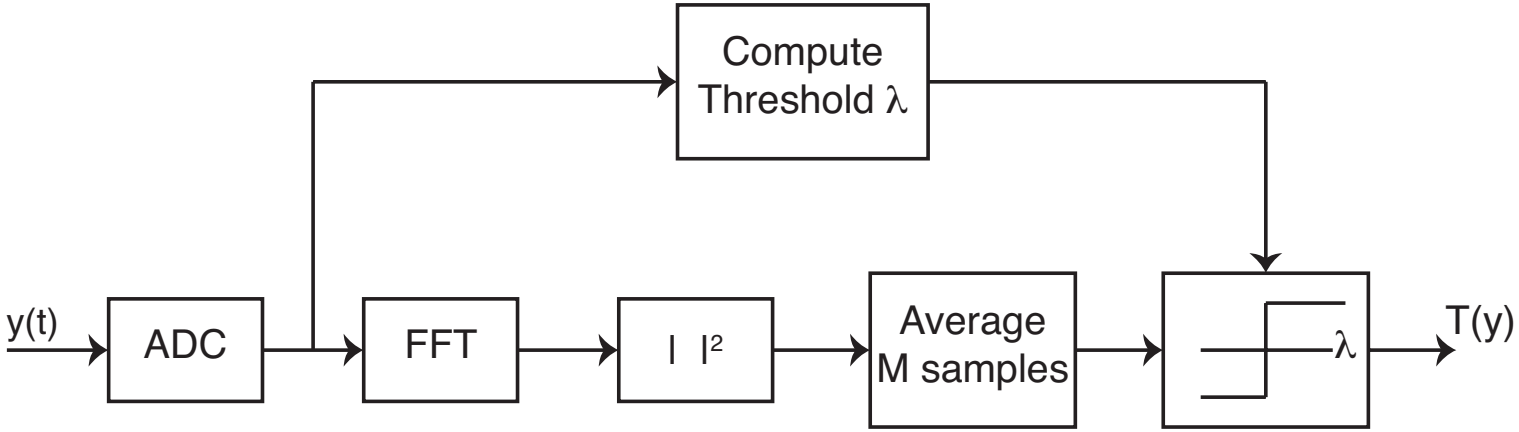

Spectrum Sensing - Energy Detection

Threshold λ is defined by the Neyman-Pearson Lemma to maximise the detection probability for a given false alarm probability

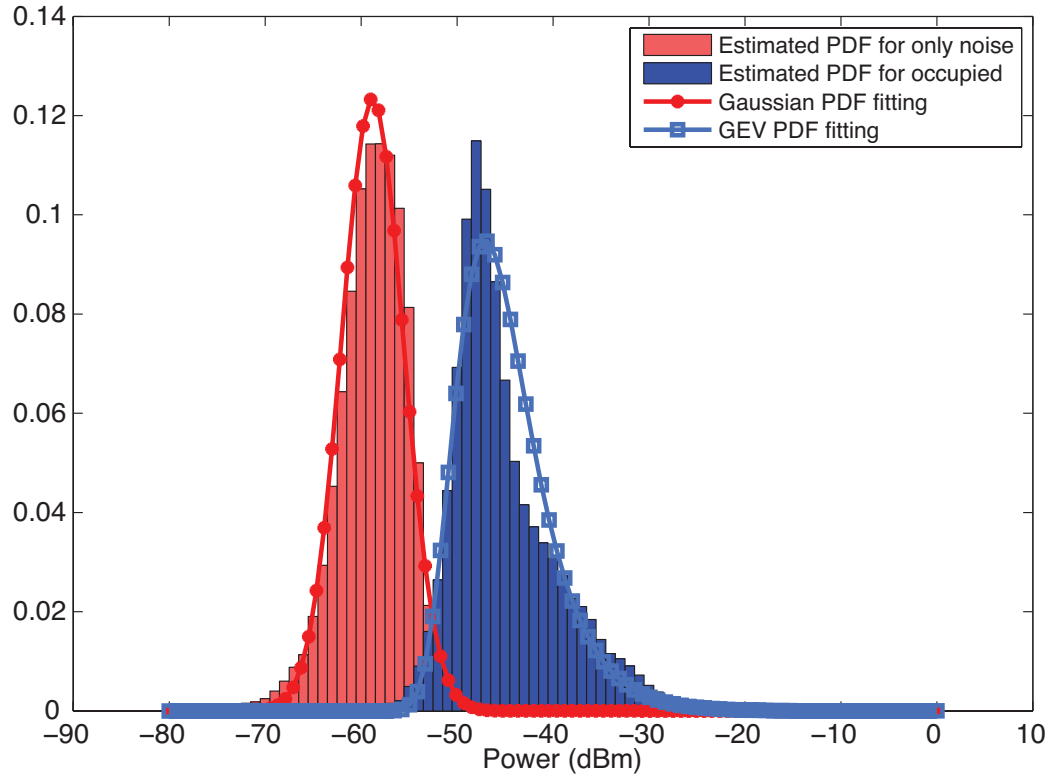

Goals of this Thesis

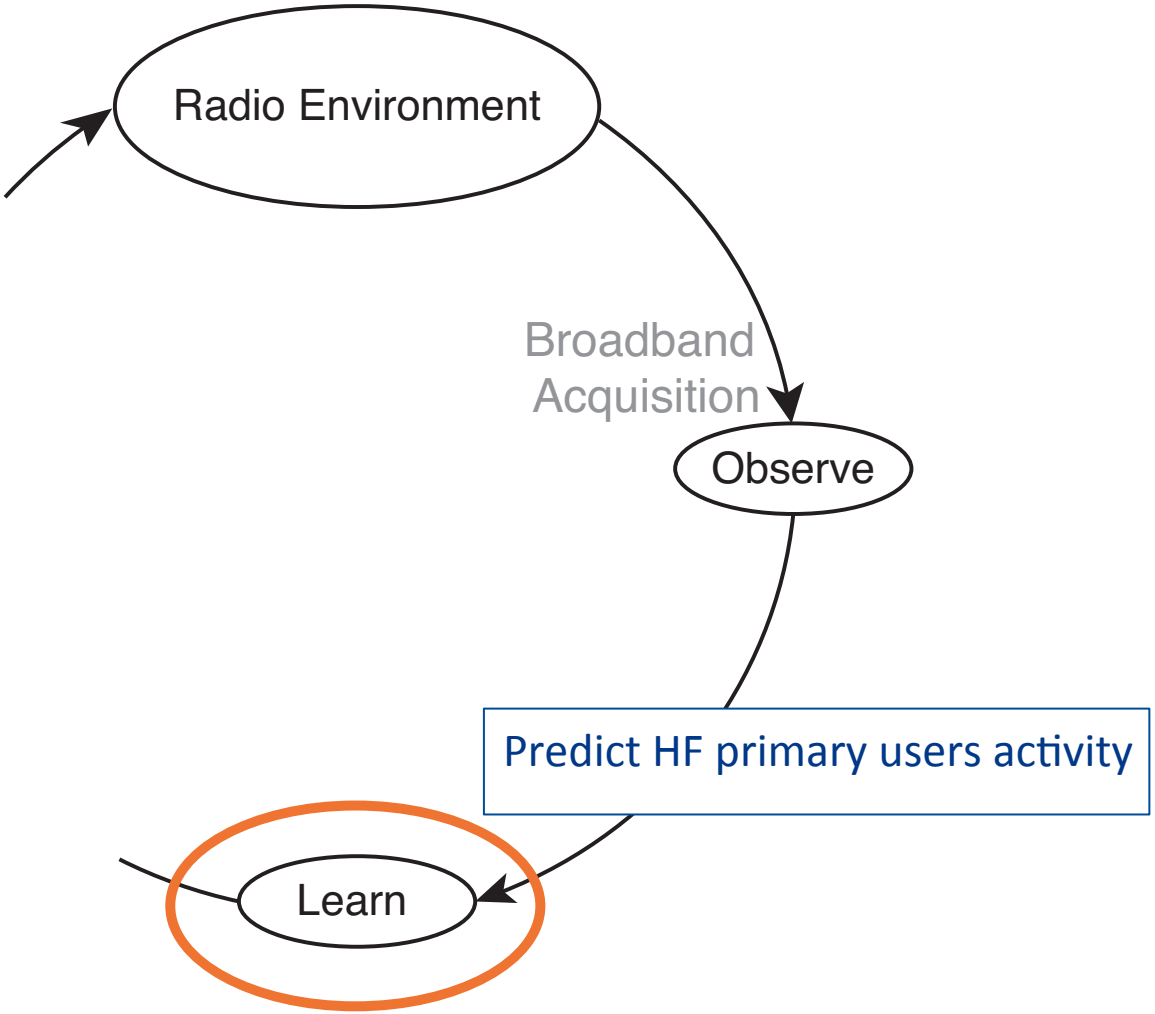

HF Primary User Dynamics Model

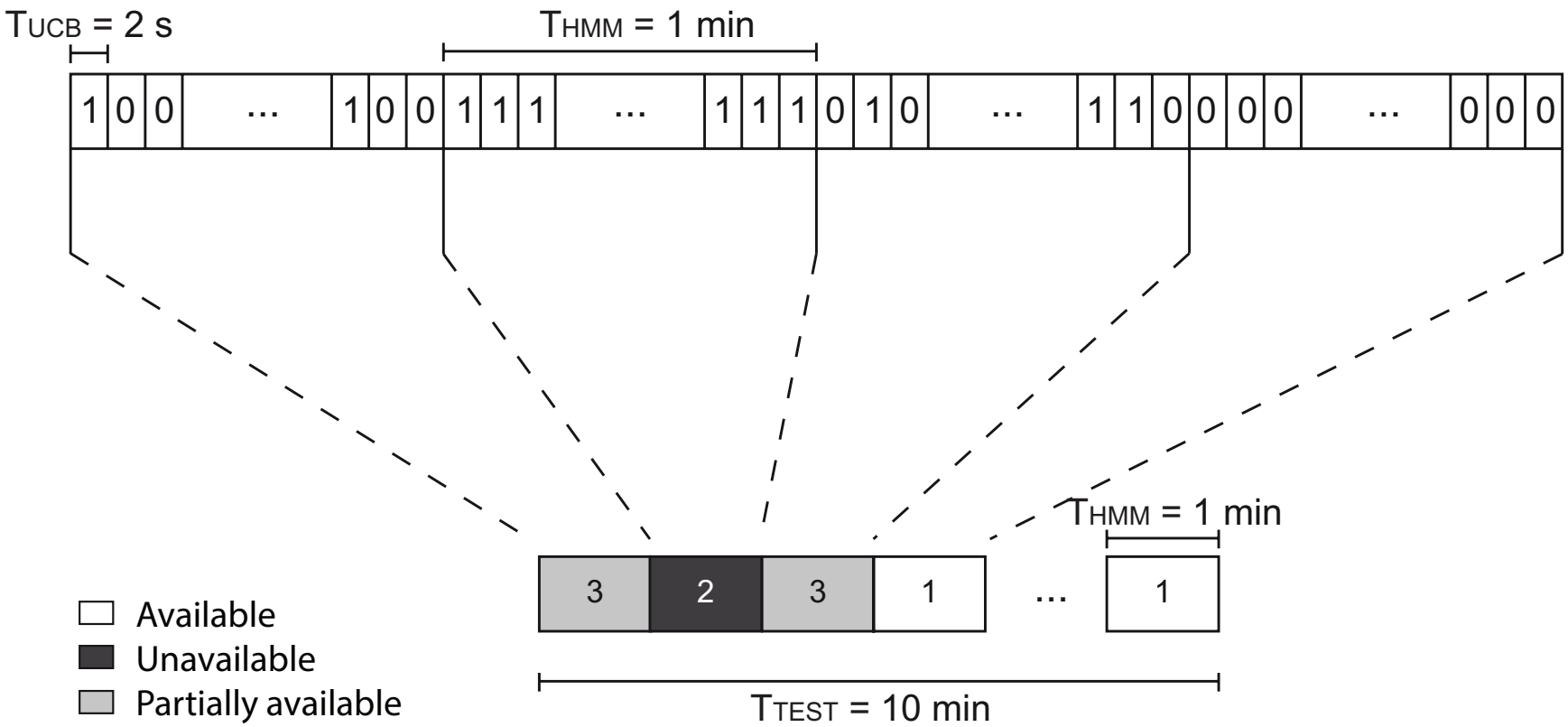

HF Primary User Dynamics Model

Hidden Markov Model

Doubly embedded stochastic process with an underlying stochastic process that is not observable (it is hidden), but it can only be observed through another set of stochastic processes that produce the sequence of observations.

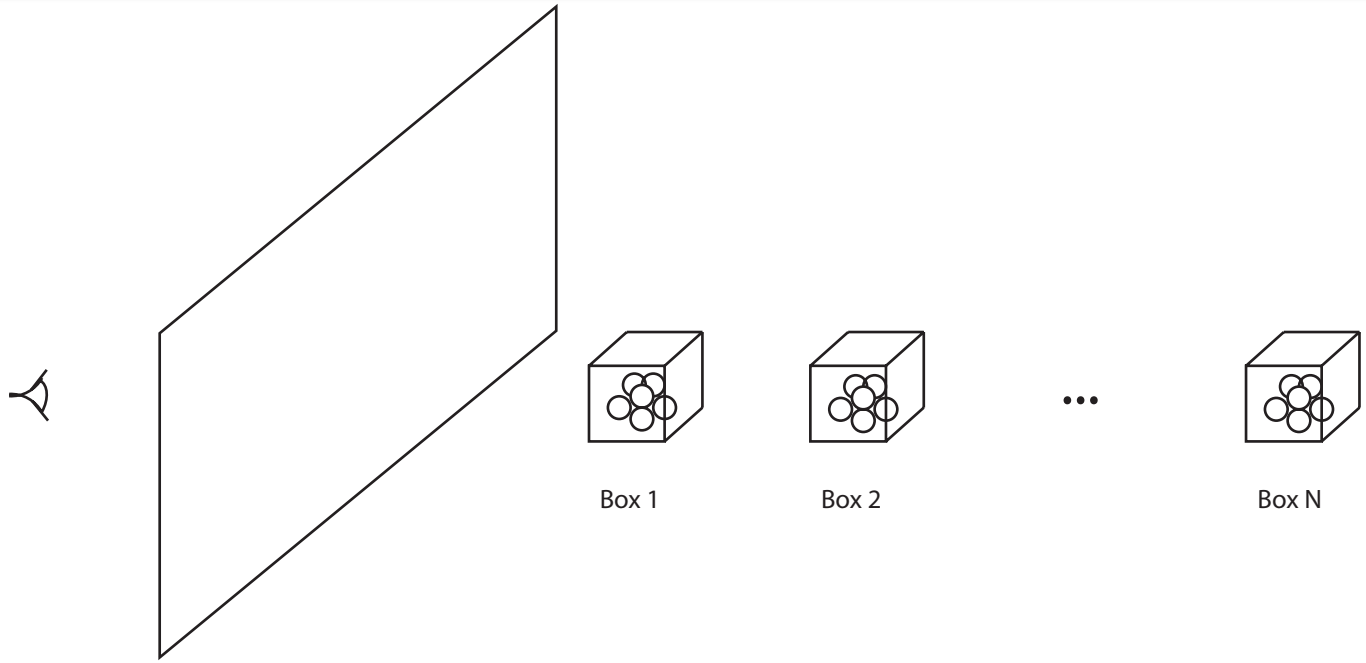

HF Primary User Dynamics Model

- Main model:
  - Ergodic HMM
  - 10 minutes sequences
- 3 submodels:
  - Left-right HMM
  - Observation symbols for 1 minute

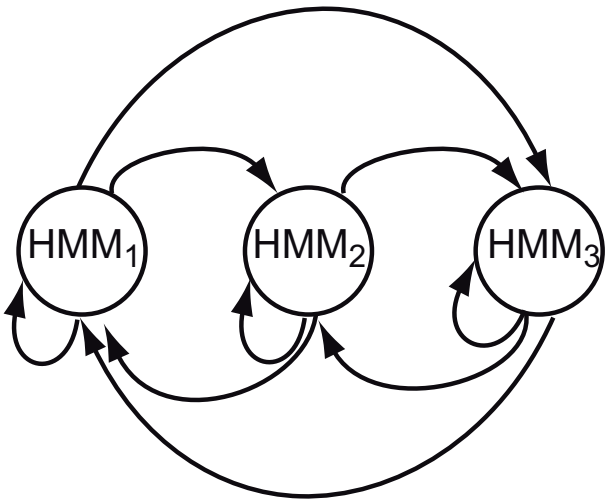

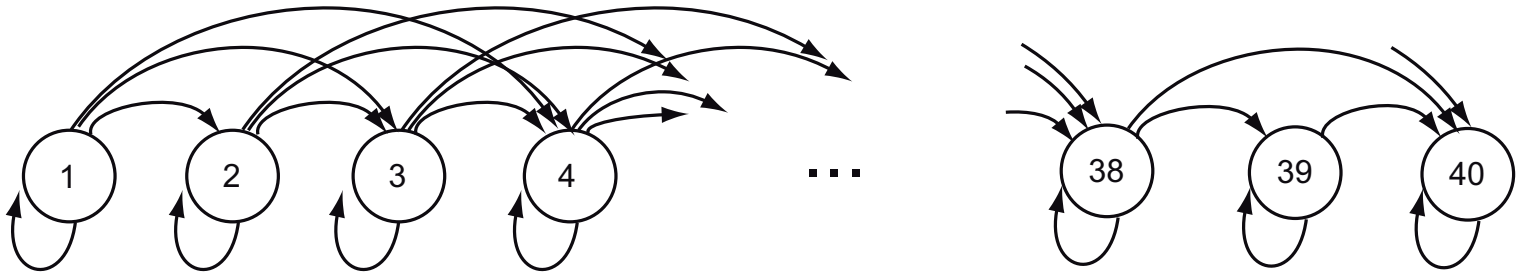

HF Primary User Dynamics Model

Long-term predictions

in a particular HF channel

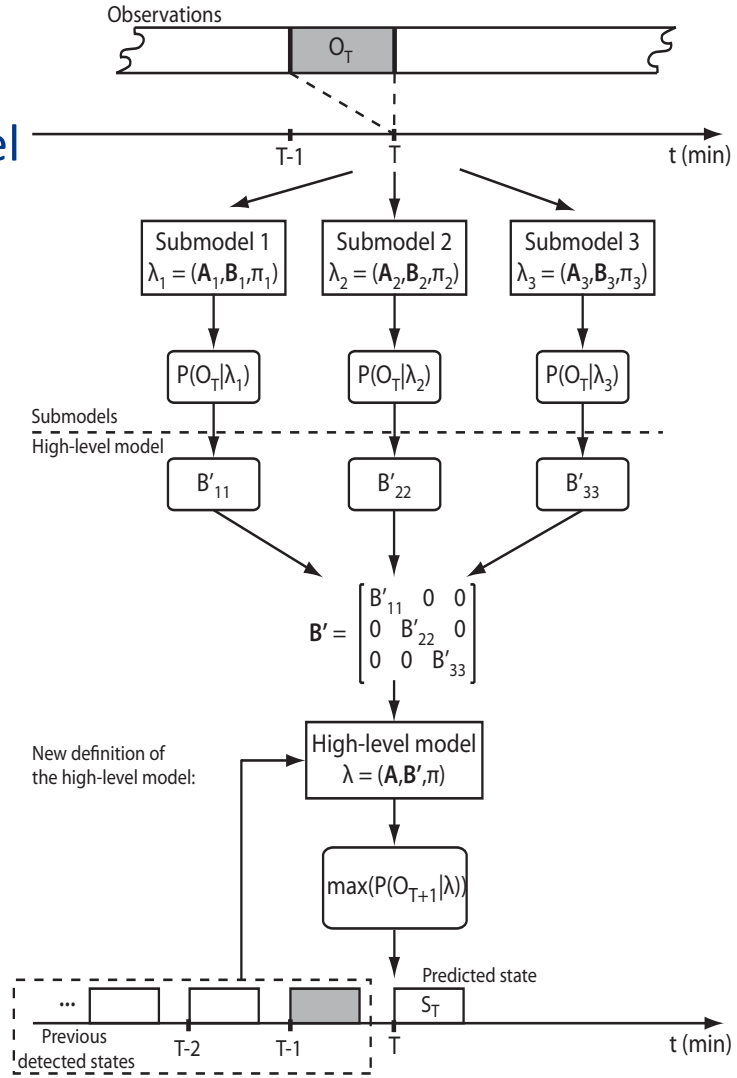

HF Primary User Dynamics Model

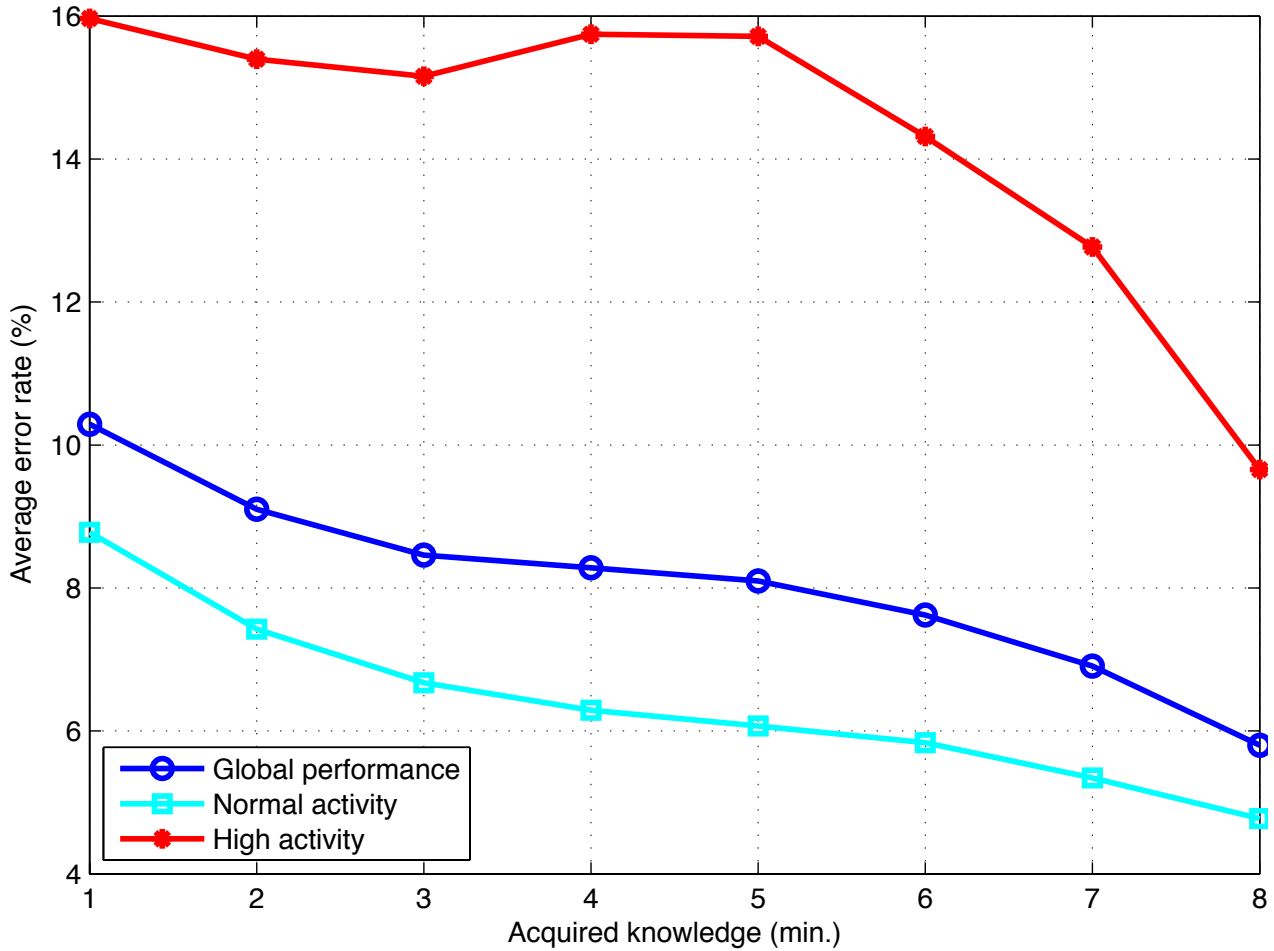

Goals of this Thesis

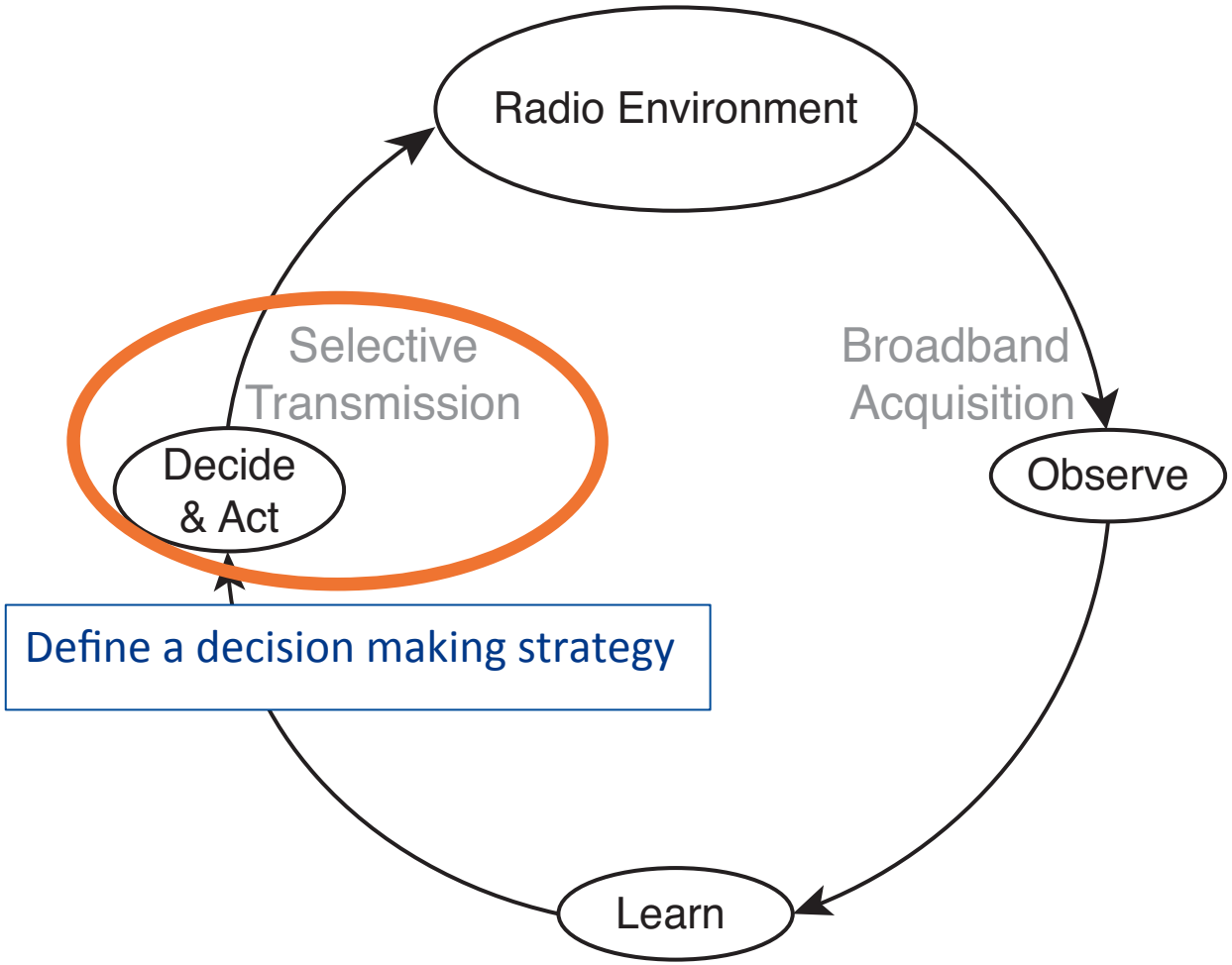

Decision making with UCB_1

Upper Confidence Bound algorithms are based on Reinforcement Learning

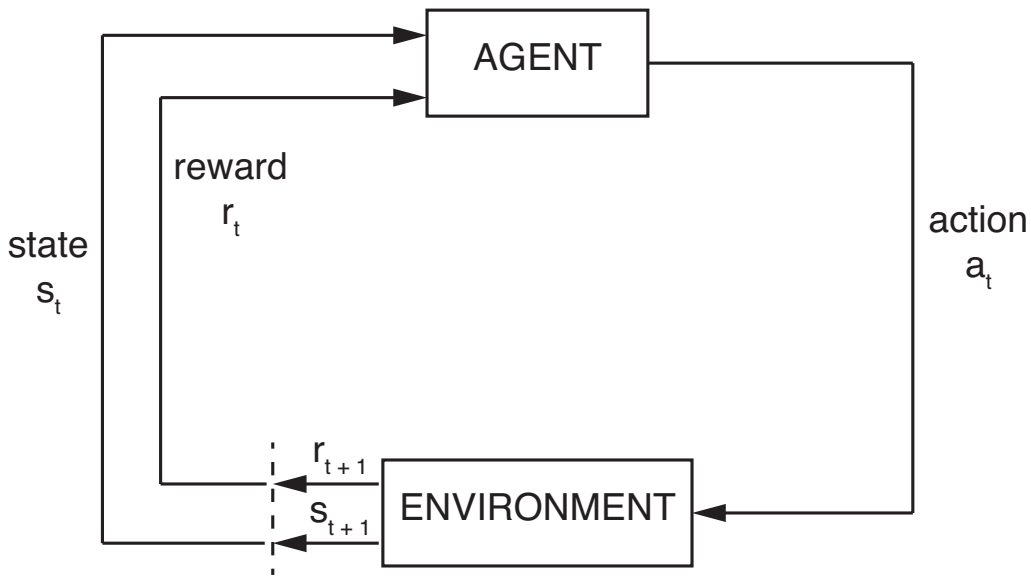

Agent-Environment Interaction

Decision making with UCB_1

UCB_1

- Provides HF users with Opportunistic Spectrum Access
- Allows for short-term activity prediction

$$B_{t,k,T_k(t)} = \overline{X}_{k,T_k(t)} + A_{t,k,T_k(t)}$$

Exploitation

$$\overline{X}_{k,T_k(t)} = \frac{\sum_{m=0}^{t-1} r_m \mathbf{1}_{\{a_m=k\}}}{t}$$

Exploration

$$A_{t,k,T_k(t)} = \sqrt{\frac{\alpha \ln(t)}{T_k(t)}}$$

Decision making with UCB_1

Single-Channel Selection with UCB_1

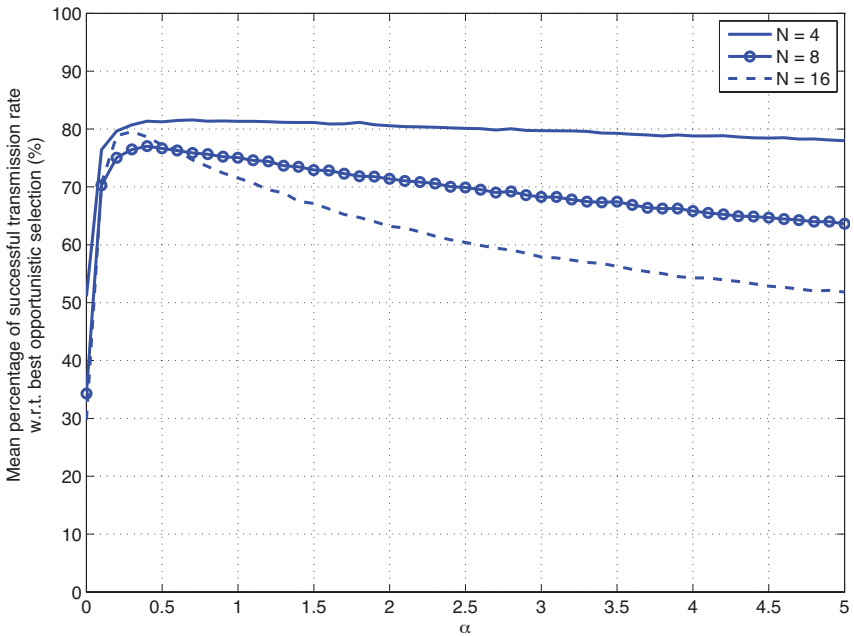

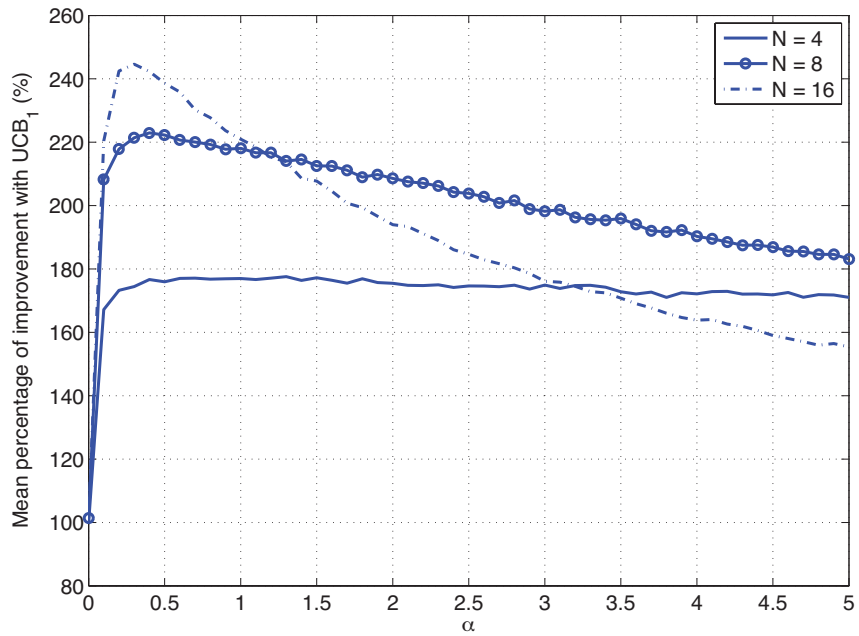

N = Total number of channels

α = exploitation-exploration factor

Best Performance with:

N = 8, α = 0.4

Decision making with UCB_1-M

Multi-Channel Selection with UCB_1-M

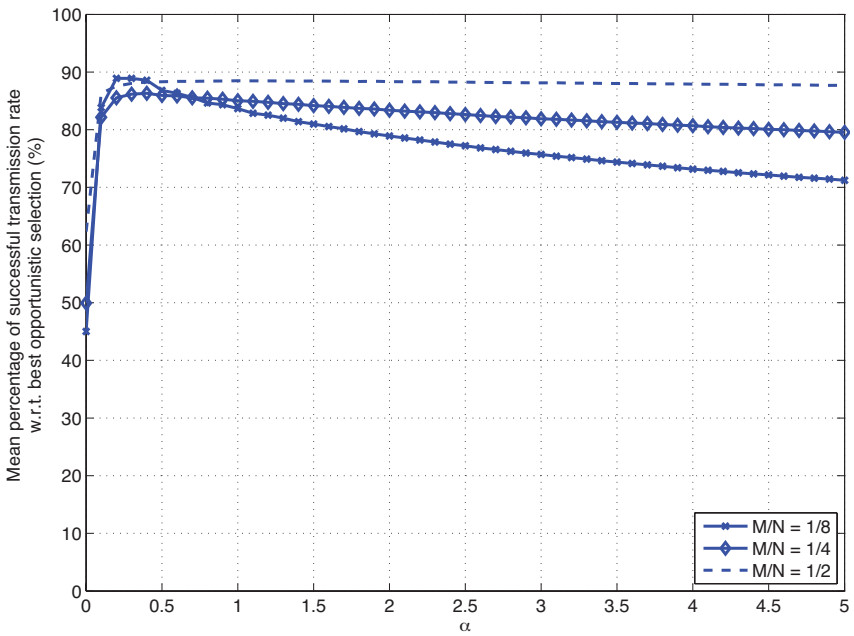

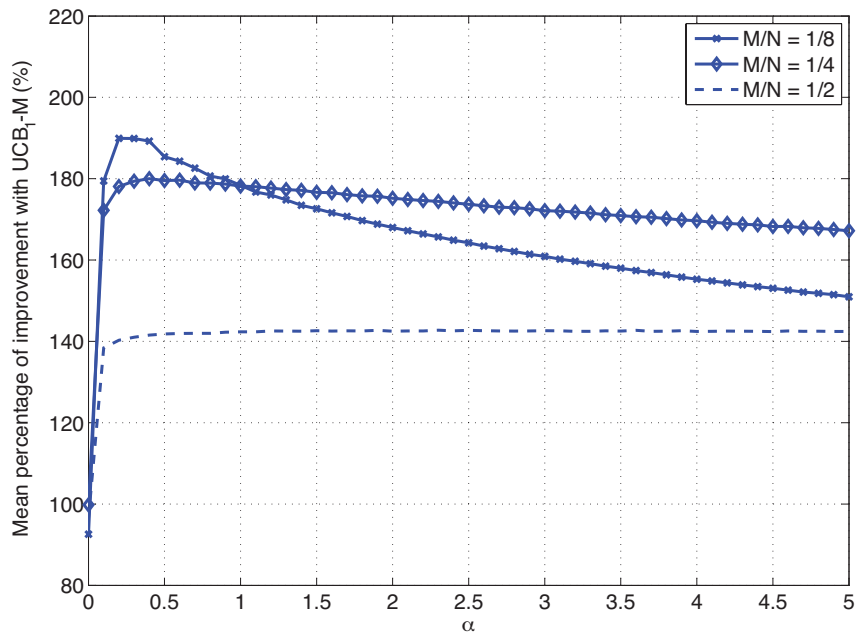

M = number of channels for transmission
(M < N)

Best Performance with:
M/N = 1/8, α = 0.4

Hybrid UCB-HMM: A Metacognitive Engine

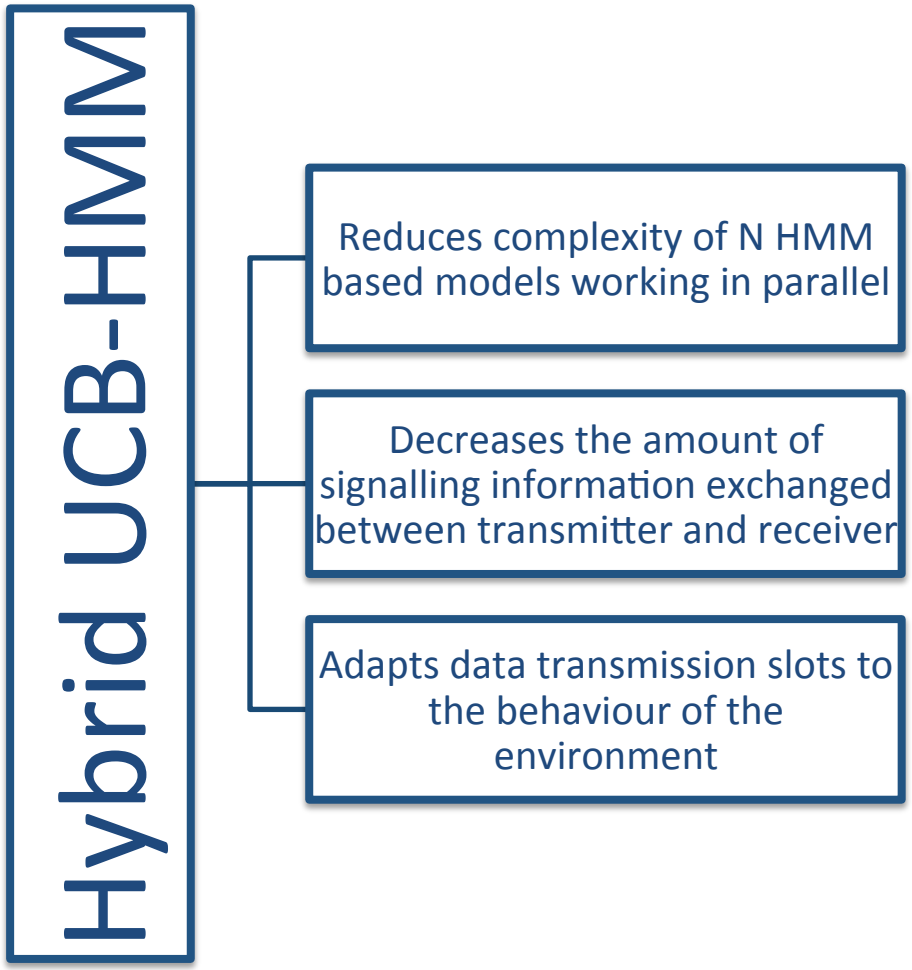

Hybrid UCB-HMM: A Metacognitive Engine

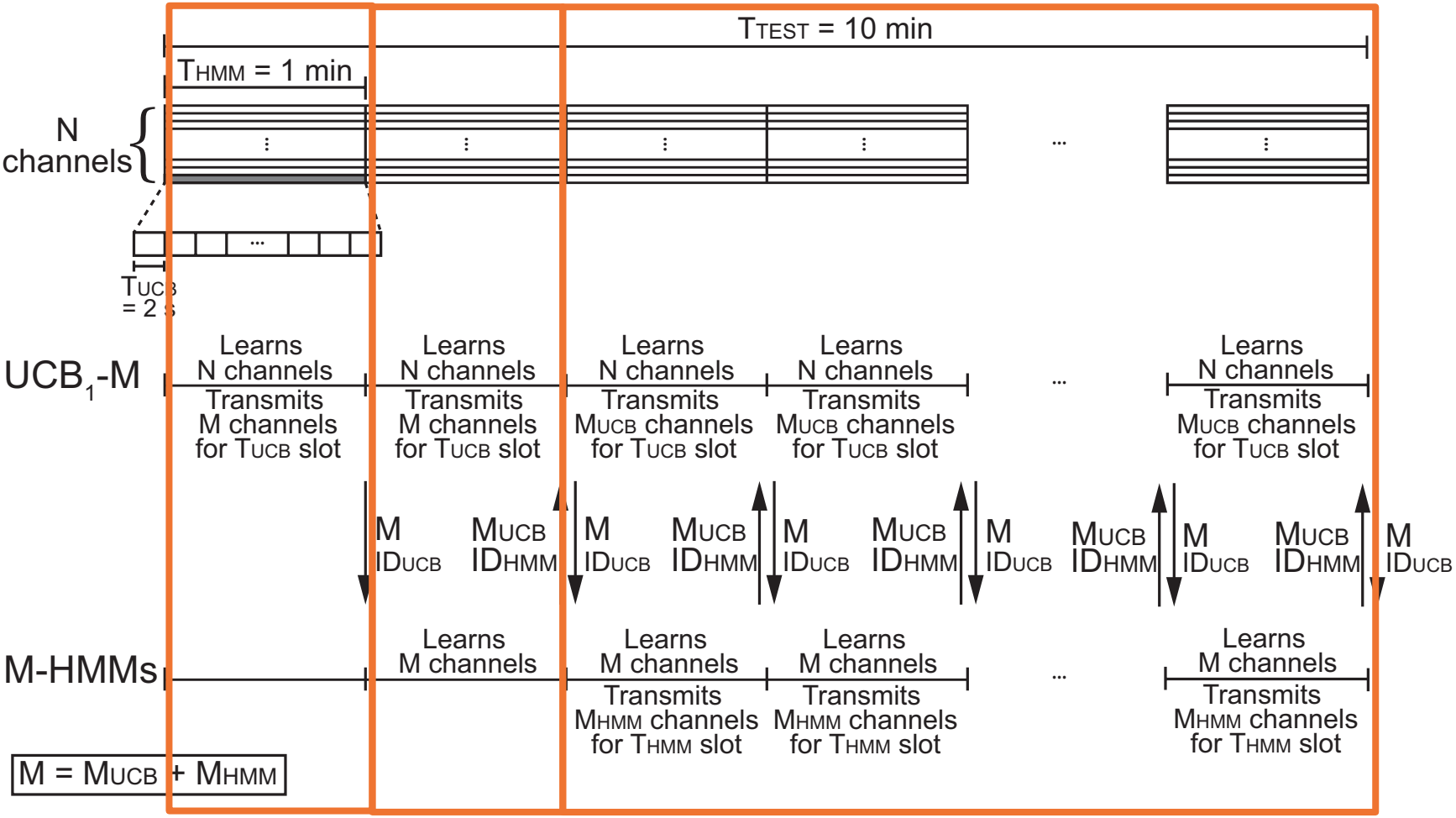

Hybrid UCB-HMM: A Metacognitive Engine

Successful transmission rate

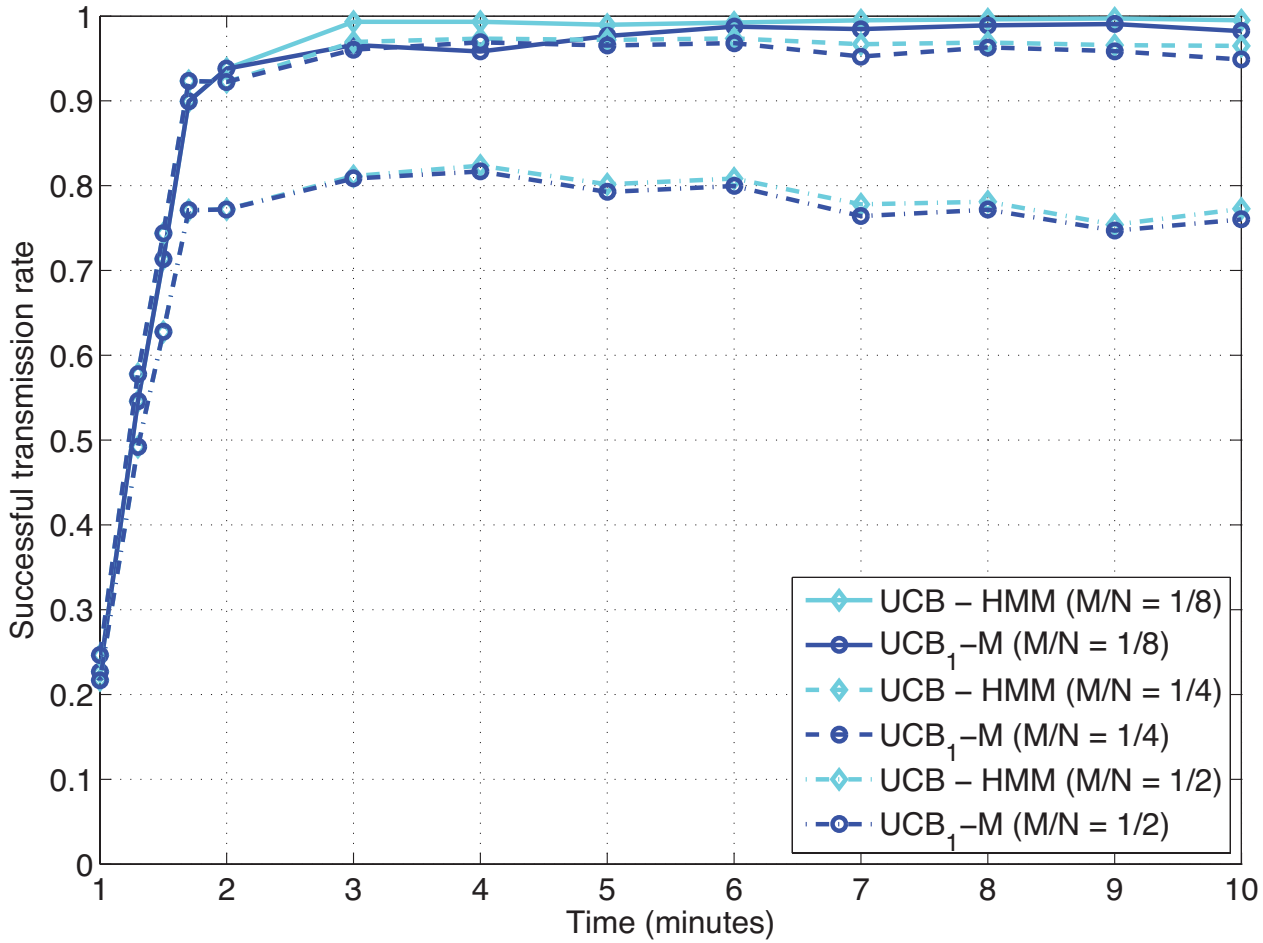

Hybrid UCB-HMM: A Metacognitive Engine

Metacognitive Strategy

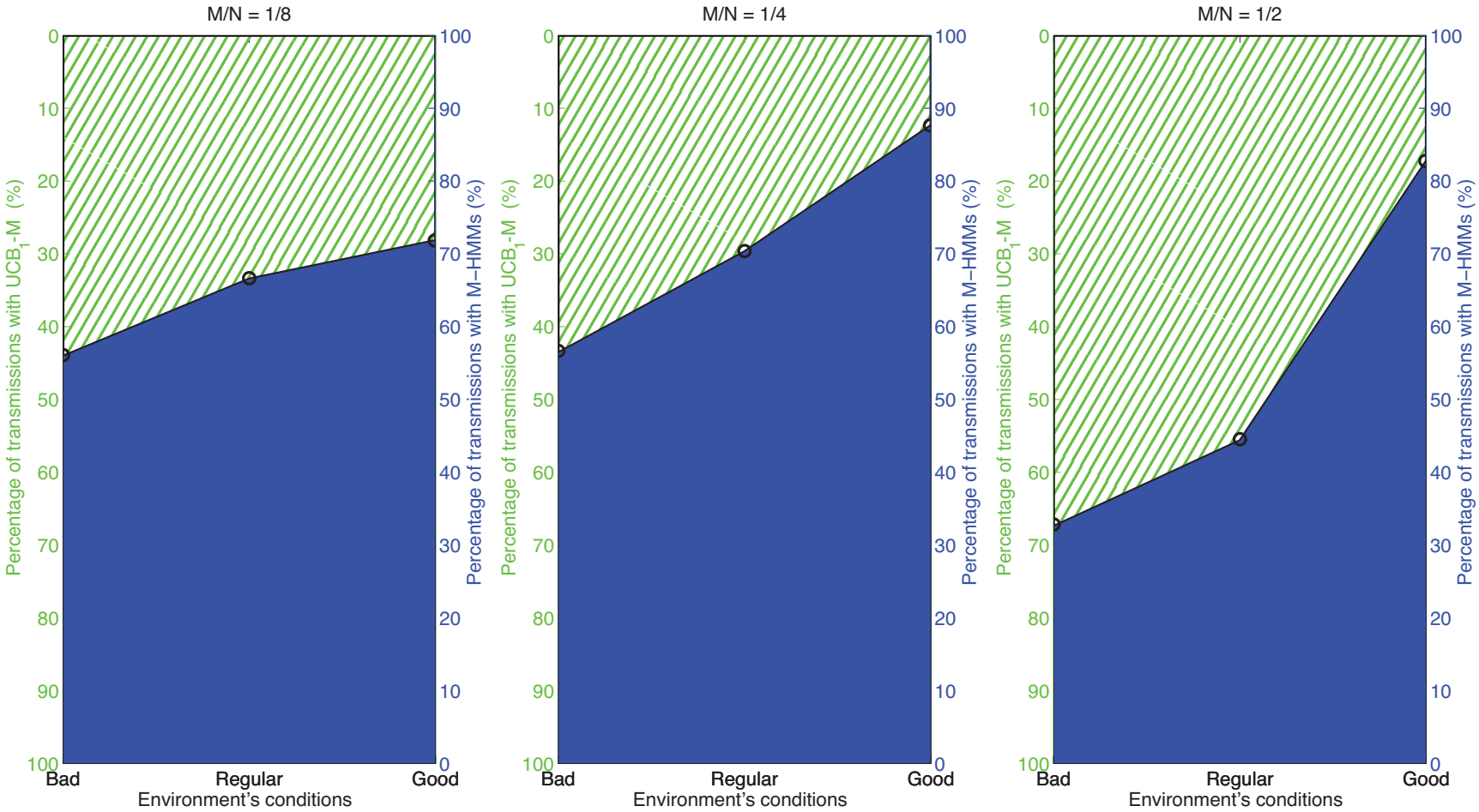

Hybrid UCB-HMM: A Metacognitive Engine

Duration of data transmission's slots

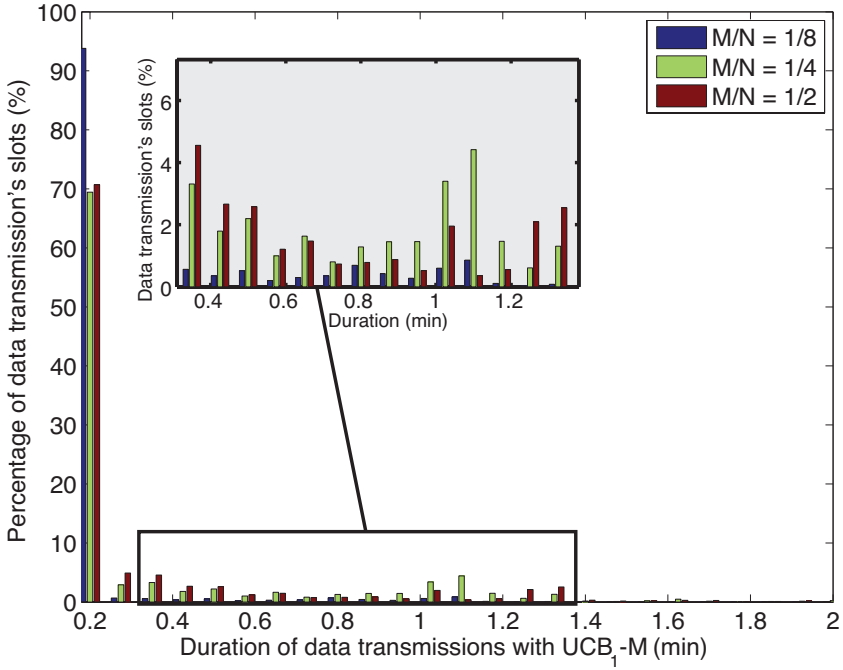

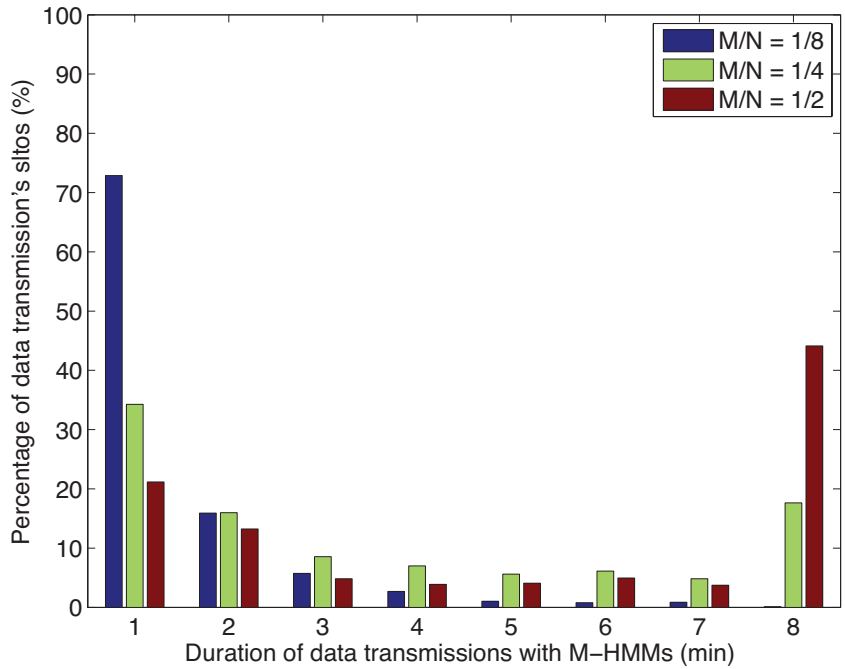

Hybrid UCB-HMM: A Metacognitive Engine

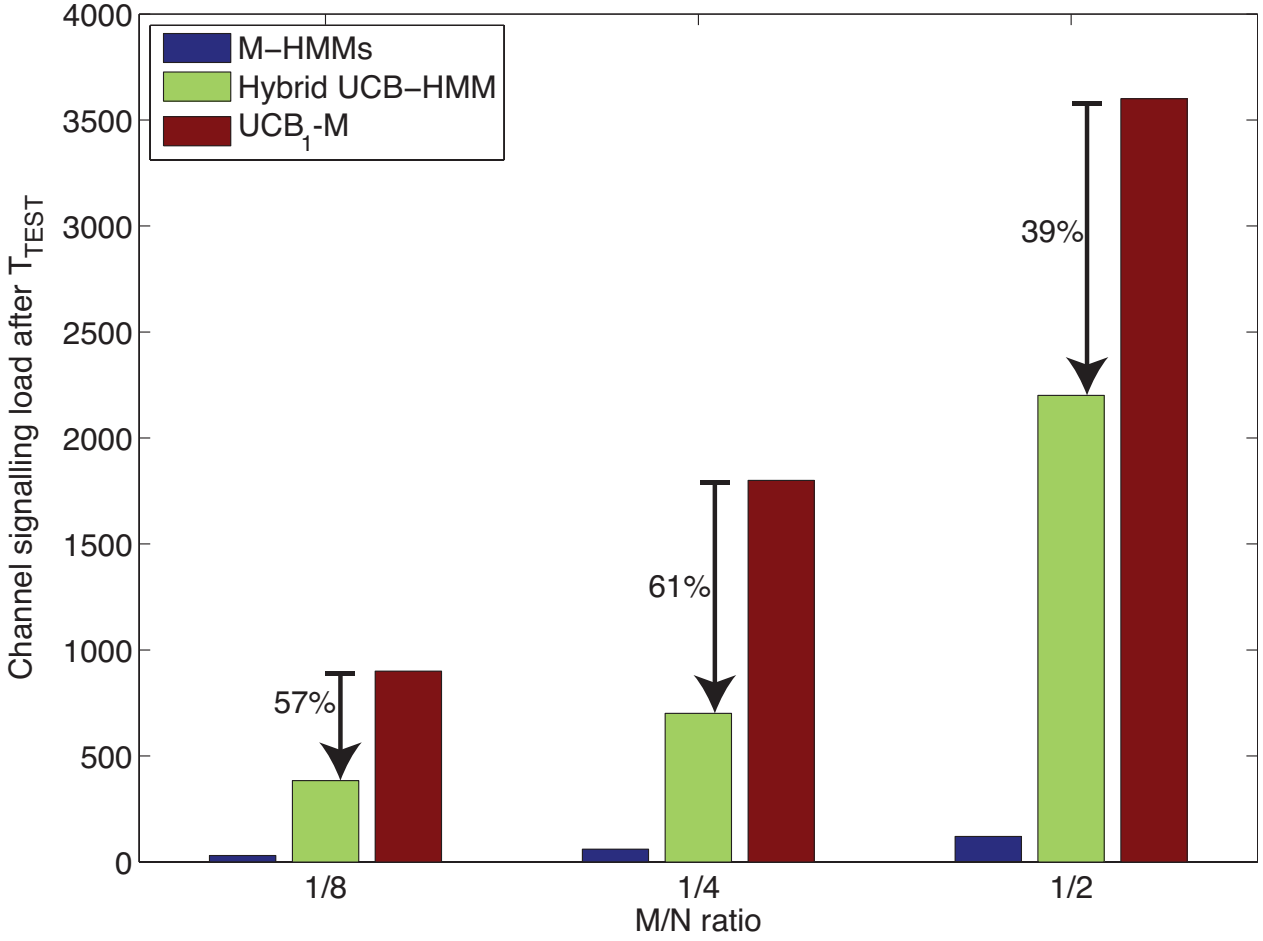

Hybrid UCB-HMM: A Metacognitive Engine

Hybrid UCB-HMM
$\alpha = 0.4$ and $M/N = 1/4$

- Achieves 95% successful transmission rate
- Reduces by 61% required channel signalling
- Adapts its configuration to the changes in the environment

Conclusions

Cognitive Radio is a feasible solution to efficiently use the HF spectrum resources

- Both learning with HMM and decision making with UCB_1 can help secondary HF users to avoid collisions with other users.
- The hybrid UCB-HMM scheme acts as a metacognitive engine in the HF environment.
- A compressive detector can be used in wideband HF receivers to detect NBI.

Future Work

- Design and implementation of a simpler mechanism for link management than current HF standards.

- Design and implementation of a NBI mitigation scheme in the analog domain.

Cognitive Radio in HF Communications: Selective Transmission and Broadband Acquisition

Ph.D. Thesis

Author: Laura Beatriz Melián Gutiérrez

Supervisors:

Dr. Iván A. Pérez Álvarez Dr. Santiago Zazo Bello

Doctorado en Cibernética y Telecomunicación